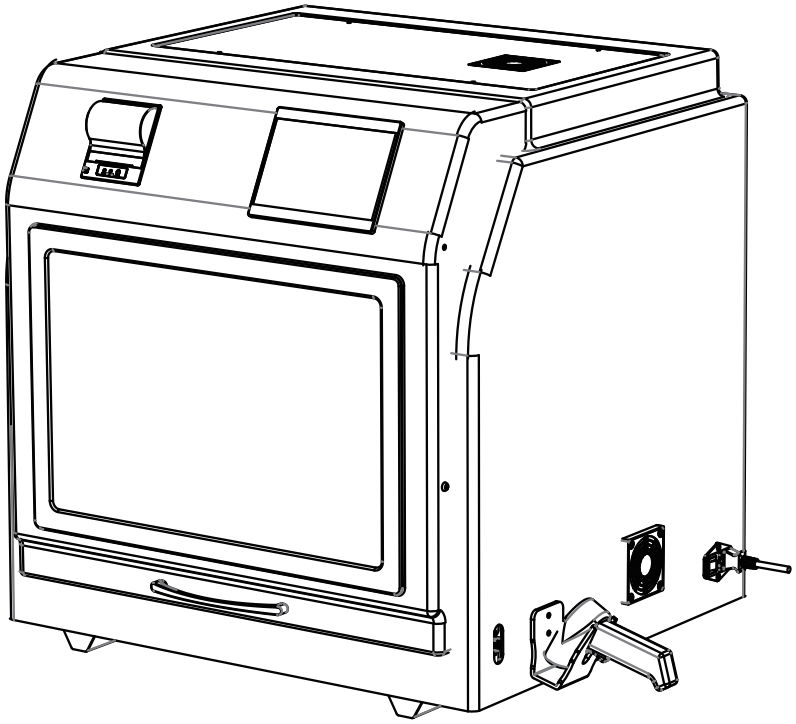

MagCore® Super Service Manual

Ver. 2022.5.20
www.rbcbioscience.com

RBC Bioscience Corp.
15F, No.15, Qiaohe Rd, Zhonghe Dist, New Taipei City 235029, Taiwan
TEL : +886-2-8912-1200 FAX : +886-2-8912-1300

EC REP Obelis s.a (obelis.net)Bd. Général
Wahis 53 1030 Brussels, BELGIUM

CONTENTS

Prologue . . . 3
Accessories . . . 15
- Shipping . . . 15
Installation . . . 16
- Before Installation . . . 16
IQ/OQ/PQ Documents . . . 17
- IQ Documents . . . 17
- OQ Documents . . . 18
- PQ Documents . . . 19
System Overview . . . 20
- Module Position Description . . . 21
Unpacking . . . 22
Prepare Unpacking Tools . . . 22
Install MagCore® HF16 Plus/Super . . . 23
- Installation settings and test . . . 24
Touch Panel and User Interface . . . 25
- Install MagCore® Cuvette . . . 26
- Install Tube, Tip . . . 26
- Install reagent cartridge . . . 26
- Emergency Stop . . . 27
- Start Programs . . . 28
- If the test result of the optic measurement is over detection . . . 29
- Stop . . . 31
- Enable the barcode function . . . 31
- Barcode scanning and editing . . . 32
- Optic data . . . 32
Easy maintenance . . . 33
- Replace O-Ring . . . 33
- Piston Test . . . 33
- Clean Piercing Needles . . . 35
- Reject Tip . . . 35
- Heater Test . . . 36
- Optic Test . . . 36
- UV sterilization . . . 37
- Alarm History . . . 37
- System Status . . . 38
- Update Program . . . 39
- Clean the Waste Box . . . 39
- Replace thermal paper . . . 40
- Replace fuse . . . 40
Advanced maintenance . . . 41
Disassemble the back service lid . . . 43
Disassemble the top service lid . . . 44
Axis directions . . . 45
Replace the UV lamp . . . 46
Replace LED Light . . . 47
Replace the optic lamp . . . 48

Replace optic lamp power supply 49
Replace the pistons 50
Replace the ejector rod module.. 52
Replace the heater module. 53
Replace the gas spring on the front door 54
Replace Door Sensor 55
Replace the M-axis sensors. 56
Replace the sensors of C, V, X and Y axes 57
Replace Cooling Fans 58
Replace the X-axis stepper motor 59
Replace the Y-axis motor 60
Replace the Y-axis belt. 61
Replace the V-axis motor 62
Replace the C-axis motor 64
Replace the C-axis timing belt 65
Replace the lift motor of the base 66
Replace the timing belt of the lift motor of the base 67
Replace PCB. 68
Replace PLC 69
Replace Power Supply. 70
Replace Touch Panel. 71
Replace Printer 72
Electrical control and engineering software 73
System 74
Parts 75
Main board configuration. 76
PLC configuration 77
Copy the engineering software to the desktop 78
Install the HMI updating software 78
Create an uploading folder 79
Install the driver 80
HMI updating 82
PLC updating 83
Position Teaching Tools 86
The pre-operation before calibration 87
X-axis calibration 88
Y-axis calibration 90
C-axis calibration 91
Automatic Optical Measurement. 93
Optical Calibration Flow Chart 94
Empty Cuvette Test of standard cuvette 94
Standard Cuvette Vaule 95
Adjust integration time 96
Start Optical Measurement 97
Trouble Shooting for Alarm Code. 99

Prologue

I. Contact Addresses

Manufacturer: RBC Bioscience Corp.
5F., No.15, Qiaohe Rd.,Zhonghe Dist., New Taipei City 235029, Taiwan
TEL:+886-2-8912-1200 FAX:+886-2-8912-1300

II. Declaration of Conformity

To which this declaration relates, we hereby declare that the above-mentioned device is in conformity with the essential requirements of the following Directive and Standards: In vitro Diagnostic Medical Devices Directive 98/79/EC

III. Trademark

MagCore®

IV. Warranty

The warranty conditions are specified in the sales contract.
Contact your RBC Bioscience Corp. representative for further information.
Any unauthorized modification of the MagCore Instrument and/
or the MagCore Software will result in invalidity of the guarantee and service contract.

V. Intended Use

The MagCore® Nucleic Acid Extraction System is an automated nucleic acid purification system consisting of the MagCore® instrument, software, Kit (consumables and reagents). The MagCore® Nucleic Acid Extraction System is intended for use by professional users for the purification of nucleic acids from biological samples for in vitro diagnostic purposes. The MagCore® Nucleic Acid Extraction Kit is for use with the MagCore® Nucleic Acid Extraction System.

The MagCore® Nucleic Acid Extraction system is intended for life science research only. It is not for use in diagnostic procedures.

The MagCore® Nucleic Acid Extraction system is not intended for in vitro diagnostic use. Any use of the MagCore® Nucleic Acid Extraction System as a front-end sample preparation system for in vitro diagnostic test systems. The validation of the combination of MagCore® Nucleic Acid Extraction system nucleic acid isolation and in vitro diagnostic testing must be performed by operator, following the relevant national regulations.

VI. Product Use Limitations

The MagCore® Nucleic Acid Extraction Instrument is not intended for use with reagent kits other than MagCore® reagent kits or with samples other than those defined within the product limitation of the specific MagCore®reagent kit being used.

VII. Preamble

Before setting up operation of the MagCore® System, it is important to read this operator's guide thoroughly and completely. Non-observance of the instructions contained herein or performing an operation not stated in this Operator's Guide could involve safety hazards.

VIII. Conventions Used in this Operator's Guide

In this operator's guide symbols are used as visual signals:

Symbol	Heading	Description
	WARNING/ CAUTION	This symbol is used to indicate that non-compliance with instructions or procedure could lead to physical injury or even death or could cause damage to the instrument.
	DANGEROUS ELECTRICAL VOLTAGE	This symbol is used to indicate the danger of personal injury due to dangerous electrical voltage. Refers to an imminent danger that may result in death or serious personal injury.
	BIO HAZARD	This symbol is used to indicate that certain precautions must be taken when working with potentially infectious material.
	HOT SURFACE	This symbol is used to label potentially hot instrument surfaces.
	ULTRAVIOLET LIGHT	This symbol indicates that the MagCore instrument contains high-energy ultraviolet lamps which can cause serious temporary eye and skin irritation. Never expose unprotected eyes or skin to the UV light.

The following symbols appear on the instrument

Symbol	Heading	Description
	MANUFACTURER OF DEVICE	On the instrument type plate.
	CE MARK	The CE mark on the instrument type plate indicates conformity with requirements of the directives relevant for this instrument.

IX. Environmental Requirements (Operating, Shipping and Storage Condition)

Power Requirements: 100V~240VAC,50/60Hz,2.5A
Temperature: 10℃- 40℃(shipping/storage), 15℃-35℃(operation)
Humidity: 30%-75%
Pressure Allowed: 700hPa-1060hPa

The MagCore® Instrument is intended for indoor use only. Wipe up spills immediately. To avoid shortening the expected lifespan of the instrument, install in location that meets the following criteria:
- *Locate on a sturdy, level surface.*
- *Avoid dusty areas.*
- *Choose a location that has good air circulations and is not exposed to direct sunlight.*
- *Avoid electrically noisy power sources.*
- *Don't install in a location where there is large temperature variability or high humidity.*
- *Don't place use near flammable gases or liquids*
- *Don't place next to heat sources.*
- *Don't place near other electrically sensitive instruments.*

X. Warnings and Precautions

This user manual contains information about warnings and cautions that must be followed by the user to ensure safe operation of the MagCore® instrument and to maintain the instrument in a safe condition.

Possible hazards that could harm the user or result in damage to the instrument are clearly stated at the appropriate places throughout this user manual.

If the equipment is used in a manner not specified by the manufacturer, the protection provided by the equipment may be impaired.

Check the validity of reagents and disposables as per each instruction or caution of use.
The following safety conventions are used throughout this user manual.



WARNING

The term WARNING is used to inform you about situations that could result in personal injury to other persons. Details about these circumstances are given in a box like this one.

CAUTION

The term CAUTION is used to inform you about situations that could result in damage to an instrument or other equipment. Details about these circumstances are given in a box like this one.

The advice given in this manual is intended to supplement, not supersede, the normal safety requirements prevailing in the user's country.

1. Proper use

The MagCore® must only be operated by qualified personnel who have been appropriately trained.
Servicing of the MagCore® must only be performed by RBC Bioscience Field Service Specialists.



WARNING

Risk of personal injury and material damage

Improper use of the MagCore® may cause personal injuries or damage to the instrument.



CAUTION

Damage to the instrument

Avoid spilling water or chemicals onto the MagCore® Instrument damage caused by water or chemical spillage will void your warranty.

Note: Do not place items on top of the MagCore® instrument.



WARNING

Risk of personal injury

Two people must carry the instrument. After the MagCore® has been unpacked, 2 people must lift the instrument. Lift the instrument by placing your hands underneath the bottom of the instrument.

Note: In case of emergency, switch off the MagCore® instrument and unplug the power cord from the power outlet.



CAUTION

Damage to the instrument

Ensure that the MagCore® is switched off before you manually move the mechanical components of the instrument.

2. Electrical safety

Note: If operation of the instrument is interrupted in any way (e.g., due to interruption of the power supply or a mechanical error), first switch off the MagCore® instrument, then disconnect the electrical cord from the power supply and contact RBC Bioscience Technical Services.



WARNING

Electrical hazard

Any interruption of the protective conductor (earth/ground lead) inside or outside the instrument or disconnection of the protective conductor terminal is likely to make the instrument dangerous. Intentional interruption is prohibited.
Lethal voltages inside the instrument When the instrument is connected to line power, terminals may be live. Opening covers or removing parts is likely to expose live parts.

When working with the MagCore® instrument:
- *Do not adjust or replace internal parts of the instrument.*
- *Do not operate the instrument with any covers or parts removed.*
- *If liquid has spilled inside the instrument, switch off the instrument, disconnect it from the power outlet, and contact RBC Bioscience Technical Services.*
- *The instrument shall be installed in a way that the power cord is accessible.*
- *If the MagCore® instrument becomes electrically unsafe, prevent other personnel from operating it, and contact RBC Bioscience Technical Services.*

The instruments may be electrically unsafe when:
- *The MagCore® instrument or the line power cord appears to be damaged.*
- *The MagCore® instrument has been stored under unfavorable conditions for a prolonged period.*
- *The MagCore® instrument has been subjected to severe transport stresses.*
- *Liquids have come into direct contact with electrical components of the MagCore® instrument.*
- *The power cord has been exchanged with a non-official power cord.*

Note: Do not place items on top of the MagCore® instrument.



WARNING

Electrical hazard

Do not touch the MagCore® instrument with wet hands.
Never install a fuse different from that specified in the user manual.

Note: If water, reagent, sample or ethanol has spilled onto or into the instrument,
switch off the instrument and disconnect it from the line power supply. Call RBC Bioscience Technical Services.

3. Environment

Operating conditions



WARNING

Explosive atmosphere

The MagCore® instrument is not designed for use in an explosive atmosphere.

Risk of overheating

To ensure proper ventilation, maintain a minimum clearance of 15 cm (6 in.) and 30 cm (12 in.) from the rear and sides of the MagCore® instrument .
Slits and openings that ensure the ventilation of the instrument must not be covered.

4. Waste disposal

Used consumables, such as reagent cartridges and disposable filter-tips,
may contain hazardous chemicals or infectious agents from the purification process.
Such wastes must be collected and disposed of properly according to local safety regulations.



CAUTION

Hazardous materials and infectious agents

The waste contains samples and reagents.
This waste may contain toxic or infectious material and must be disposed of properly.
Refer to your local safety regulations for proper disposal procedures.

5. Biological safety

The MagCore® instrument is designed to ensure safe operation. However, since biological research sample material may be processed in the instrument, there is a possible risk of infection. Therefore, when handling potentially infectious material, always follow standard safety procedures and bear in mind the following steps to minimize the chance of contamination or infection.

Note: Specimens and reagents containing materials from humans should be treated as potentially infectious.
Use safe laboratory procedures as outlined in publications such as Biosafety in Microbiological and Biomedical Laboratories, HHS.

Samples



WARNING

Samples containing infectious agents

Some samples used with this instrument may contain infectious agents.
Handle such samples with the greatest of care and in accordance with the required safety regulations.
Always wear safety glasses, gloves and a lab coat.
The responsible persons (e.g., laboratory manager) must take the necessary precautions to ensure that the surrounding workplace is safe, and that the instrument operators are suitably trained and not exposed to hazardous levels of infectious agents as defined in the applicable Safety Data Sheets (SDSs) or OSHA, ACGIH† or COSHH‡ documents.*
Venting for fumes and disposal of wastes must be in accordance with all national, state, and local health and safety regulations and laws.
** OSHA: Occupational Safety and Health Administration (United States of America).*
† ACGIH: American Conference of Government Industrial Hygienists (United States of America).
‡ COSHH: Control of Substances Hazardous to Health (United Kingdom).

6. Chemicals



WARNING

Hazardous chemicals

Some chemicals used with the MagCore® instrument may be hazardous or may become hazardous after completion of a purification.
Always wear safety glasses, gloves, and a lab coat.
The responsible persons (e.g., laboratory manager) must take the necessary precautions to ensure that the surrounding workplace is safe and that the instrument operators are not exposed to hazardous levels of toxic substances (chemical or biological) as defined in the applicable Safety Data Sheets (SDSs) or OSHA, ACGIH† or COSHH‡ documents.*
Venting for fumes and disposal of wastes must be in accordance with all national, state, and local health and safety regulations and laws.

Toxic fumes

Note: If you work with volatile solvents, toxic substances, etc., you must provide an efficient laboratory ventilation system to remove vapors that may be produced.



WARNING

Toxic fumes

Do not use bleach to clean or disinfect the MagCore® instrument. Bleach in contact with salts from the buffers can produce toxic fumes.

Toxic fumes

Do not use bleach to disinfect used labware. Bleach in contact with salts from the buffers used can produce toxic fumes.

7. Mechanical hazards

The worktable of the MagCore® instrument moves during operation of the instrument.
Never open the MagCore® instrument door while the MagCore® instrument is operating.



WARNING

Moving parts

To avoid contact with moving parts during operation of the MagCore® instrument, the instrument must be operated with the door closed.

8. Heat hazard

The MagCore® instrument worktable contains a heating system.



Hot surface

The heating system can reach temperatures of up to 90°C. Avoid touching it when it is hot.

9. UV radiation

The MagCore® instrument supports UV lamps. The wavelength of the UV light produced by the UV lamp is 253.7 nm. This wavelength corresponds to ultraviolet light type C, which can be used for decontamination procedures.



CAUTION

UV radiation

Avoid looking directly into UV light. Do not expose your skin to UV light.

Damage to the instrument

The UV lamps need a minimum switch-on time of 20 minutes. Do not interrupt a UV light cycle before 20 minutes have passed since it will reduce the lamp's lifetime.



CAUTION

Damage to the instrument

Be careful not to damage the cover of the UV lamps when loading and unloading the worktable.

Damage to the instrument

Do not slam the door. It may harm the filament of the UV lamp.



WARNING

Risk of personal injury

The UV lamp consists of a robust glass cylinder. It is safely located inside the door of the MagCore® instrument. In case of accidental breakage of the lamp, contact RBC Bioscience Technical Services or your local distributor to arrange proper disposal of the lamp.

10. Maintenance safety



WARNING
CAUTION

Risk of personal injury and material damage

Only perform maintenance as described in this user manual.

Risk of personal injury and material damage

Improper use of the MagCore® instrument instrument may cause personal injuries or damage to the instrument. The MagCore® instrument must only be operated by qualified personnel who have been appropriately trained.
Servicing of the MagCore® instrument must only be performed by RBC Bioscience Field Service Specialists.



WARNING

Risk of fire

When cleaning the MagCore® instrument with alcohol-based disinfectant, leave the instrument door open to allow flammable vapors to disperse. Only clean the MagCore® instrument with alcohol-based disinfectant when worktable components have cooled down.



CAUTION

Damage to the instrument

Do not use bleach, solvents or reagents containing acids, alkalis or abrasives to clean the MagCore® instrument.

Damage to the instrument

Do not use spray bottles containing alcohol or disinfectant to clean surfaces of the MagCore® instrument. Spray bottles should be used only to clean items that have been removed from the worktable.

Damage to the instrument(s)

After wiping the worktable with paper towels, make sure that no bits of paper towel remain. Pieces of paper towel remaining on the worktable could lead to a worktable collision.



WARNING
CAUTION

Risk of personal electric shock

Do not open any panels on the MagCore® instrument.
Only perform maintenance as described in this user manual.

XI. Disposal of the Instrument

Disposal Recommendations

All electrical and electronic products should be disposed of separately from the municipal waste system. Proper disposal of your old appliance prevents potential negative consequences for the environment and human health.

The instrument must be treated as biologically contaminated hazardous waste. Decontamination (i.e., a combination of processes, including cleaning, disinfection and/or sterilization) is required before reuse, recycling or disposal. Dispose of the instrument according to local and/or laboratory regulations. For more information contact your local RBCBioscience Support personnel.

Components of your control unit such as the monitor, which are marked with the crossed-out wheeled bin symbol are covered by the European Directive 2002/96/EC on waste electrical and electronic equipment (WEEE) of the European Parliament and the Council of January 27, 2003. These items must be disposed of via designated collection facilities appointed by government or local authorities. For more information about disposal of your old product, please contact your city office, waste disposal service or local RBCBioscience Support personnel.

It is left to the responsible laboratory organization to determine whether control unit components are contaminated or not. If contaminated, treat in the same way as the instrument.

Overview

1. Introduction

MagCore® instrument Purification Procedure

Purification or isolation of nucleic acids is the first step in most molecular biology studies and all recombinant DNA techniques.

The MagCore® instrument provides automated nucleic acid purification for a range of research sample types. The MagCore® instrument is designed for use by laboratory professionals. The purification methods use sample lysis and binding to Cellulose Coated Magnetic Beads as the primary separation principle. Up to 16 samples can be prepared in a single run.

The automated purification performed by the MagCore® instrument includes:

- *Sample lysis in the presence of a specially formulated Lysis Buffer*
- *Binding of nucleic acids to Cellulose Coated Magnetic Beads*
- *Washing of the bound target molecules away from other components*
- *Elution of the nucleic acids*

2. Specifications of the Instrument

General Specifications

Model	Super
System Components	1. Pipetting Unit: X and Y-axis movement for sample transfer and dispense. 2. Electric Control: PLC module and ARM-based main board embedded in. 3. UV Light: Power 8W, life duration 10,000 hrs. 4. D2 Lamp life: 800 hours.) 5. Heating Block: RT-90°C. 6. OD detection range: ABS <6. 7. Detection source: D2 lamp. 8. Detection wavelength: 260nm, 280nm,320nm. 9. Display Screen: 7 inch colored touch panel. 10. Accessories: T - Rack, Cartridge Rack. 11. Barcode Scanner, embedded thermal printer.
Power Supply	Voltage: AC 100V-240V; Frequency: 50/60Hz
Dimension	W760 x D710 x H770 (mm) / W27.95 x D29.92 x H30.31 (inches)
Net Weight	76.5kg / 168.68LB

Operating Parameters

Processing Capacity	*1-16 samples per batch*
Processing Time	*30-90 minutes (depends on sample type and method)*
Sample Volume	*200 µl / 400 µl / 1,200 µl / 4ml*
Elution Volume	*60µl / 100µl / 150µl / 200 µl*
Purity	*DNA : O.D A260/280 ratio 1.8 ± 0.1*
	RNA : O.D A260/280 ratio 2.0 ± 0.2

Accessories

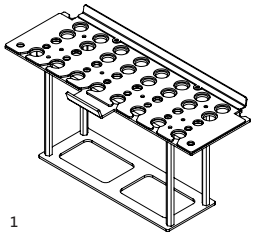
1

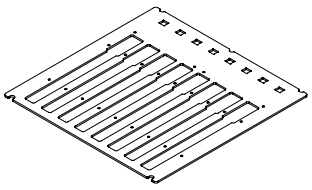
2

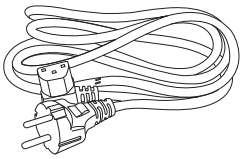
3


4

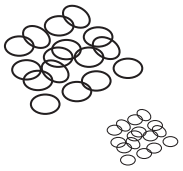
5 6

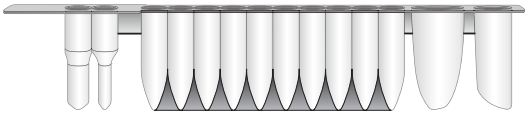
7


8


9

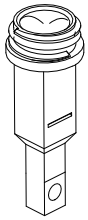
10
(MagCore Super Only)

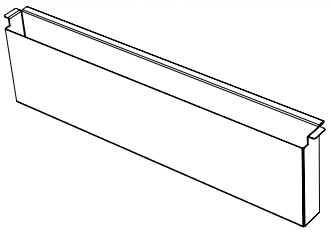
11

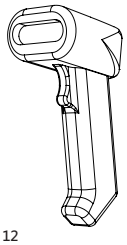
12
(MagCore HF16 Optional)

1. T-Rack X 2
2. Cartridge Rack X 2
3. Power Cable X 2 (Europe standard and U.S.A standard)
4. Grease X 1
5. 3mm O-Rings X 16
6. 5mm O-Rings X 16
7. Empty Cartridge X 10
8. Sample Tube /Elution Tube X 20
9. Pipette Tip X 20
10. MagCore Cuvette Set(10pcs) X 1
11. Waste Box X 1
12. Barcode Scanner X 1 (MagCore Super Only)

You can purchase Cat. No.: MSC100 MagCore Cuvette Set (X100) from the local distributor.

– Shipping

The MagCore Instrument is shipped fastened to a pallet enclosed in a wooden case.

Use only the original packaging for transportation or relocation of the MagCore Instrument.

Installation

– Before Installation

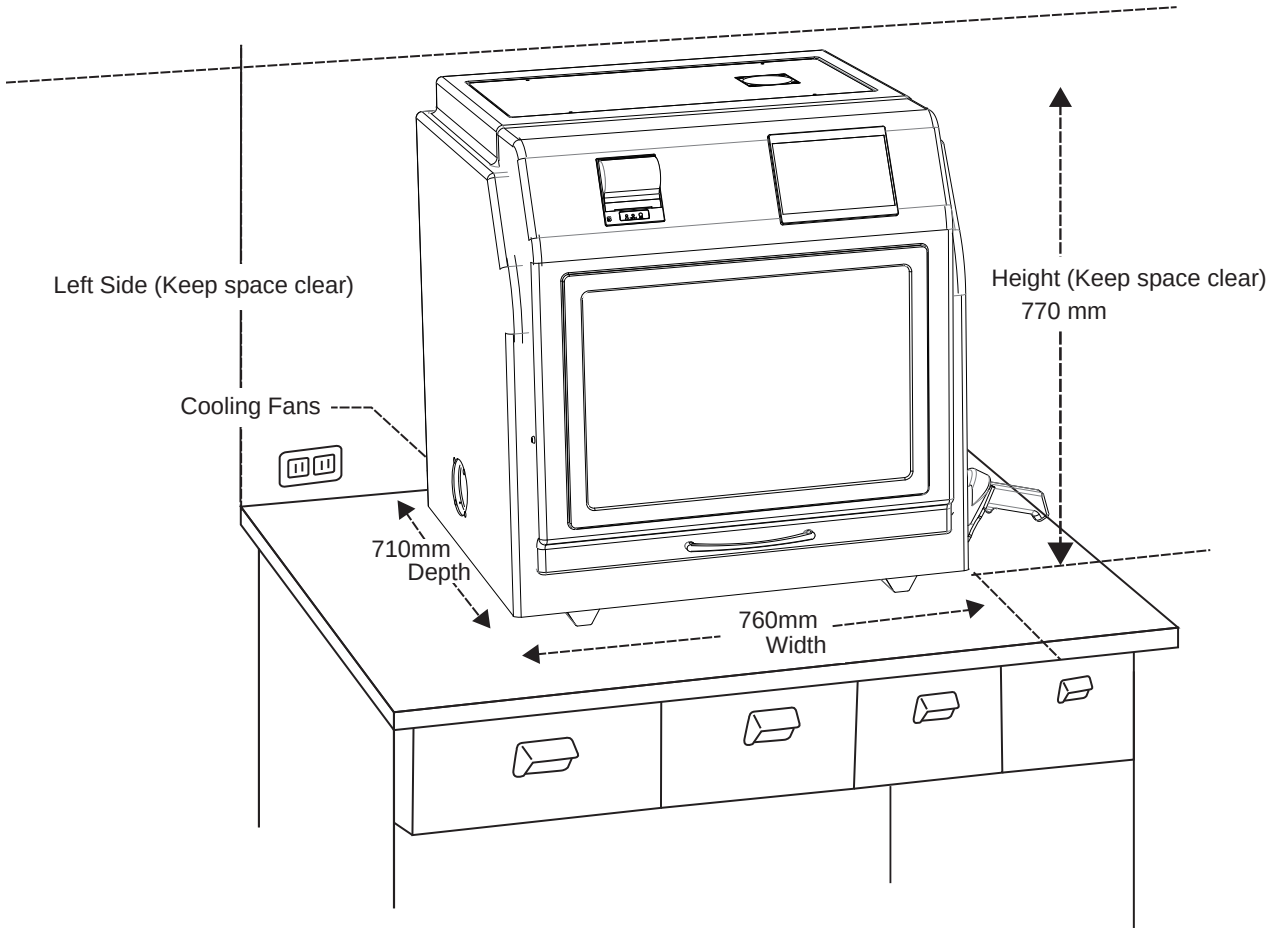

Please refer to the machine size shown in the above figure to prepare an appropriate position for the machine and reserve space for heat dissipation.

IQ/OQ/PQ Documents

– IQ Documents

MagCore® Super and HF16 Plus

Installation Qualification/Operation Qualification/Performance Qualification

Serial No._____Date_____

Installation Qualification:

IQ check list	PASS	FAIL	NOTE
Machine Inspection:			
* No obvious defect on casing.			
* Check handle.	☐	☐	
* No obvious defect on PMMA LOGO surface.	☐	☐	
* Check T-rack.	☐	☐	
* Check Cartridge rack.	☐	☐	
* Check door function.	☐	☐	
	☐	☐	
Function Test:			
* Check outlet voltage:110~220V.	☐	☐	
* Turn on machine.	☐	☐	
* Check 7 inch touch panel.	☐	☐	
* Check LED LOGO light.	☐	☐	
* Barcode scan function***(Not for HF16 Plus)***.	☐	☐	
* UV lamp Test.	☐	☐	
* Motor Test (All Axis Test).	☐	☐	
* Reject Tip Test (Act smoothly).	☐	☐	
* Heater Test (RT to 60°C less than 7mins).	☐	☐	
* System Time Setup (In System Status).	☐	☐	
	☐	☐	

Examination Signature		Verification Signature	

OQ Documents

Operation Qualification:

OQ check list	PASS	FAIL	NOTE
Program Code 999: **(Sample Volume: 400µL, Elution Volume: 200µL,** **Optical Measurement: Disable)**			
* Initial check.	☐	☐	
* Perforate motion check.	☐	☐	
* Tip taking motion check.	☐	☐	
* Piston aspiration check.	☐	☐	
* Magnetic separation motion check.	☐	☐	
* STOP function check (Abort and Reject tip)	☐	☐	
	☐	☐	
Optic Test: ***(Not for HF16 Plus)***			
(Empty Cuvette, Place Empty Cuvette in Slot No.1)			
* The count value in 260nm should >7000.	☐	☐	
	☐	☐	

Examination Signature		Verification Signature	

PQ Documents

Performance Qualification:

The Performance Qualification should be designed according user's requirement. The following format is an example of Performance Qualification.

Sample	Kit	Spec.	Result	PASS/FAIL
400μL Whole Blood	MagCore® Genomic DNA Whole Blood Kit MGB400-03 Cartridge 102	Total yield > 14 μg		
		Purity $OD_{260/280}$ = 1.8 ~ 2.0		
Examination Signature		Verification Signature		

System Overview

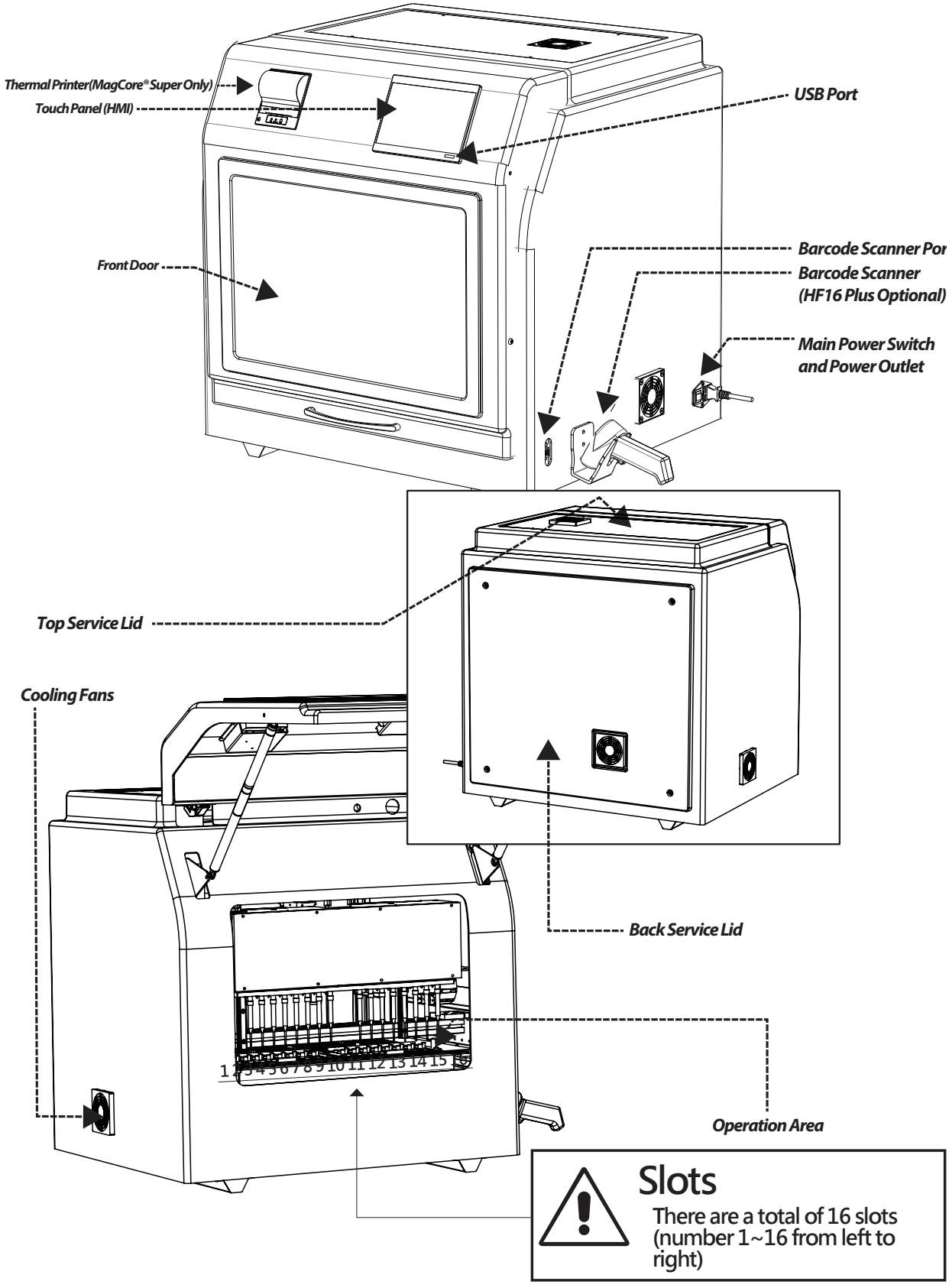

Slots

There are a total of 16 slots (number 1~16 from left to right)

Module Position Description

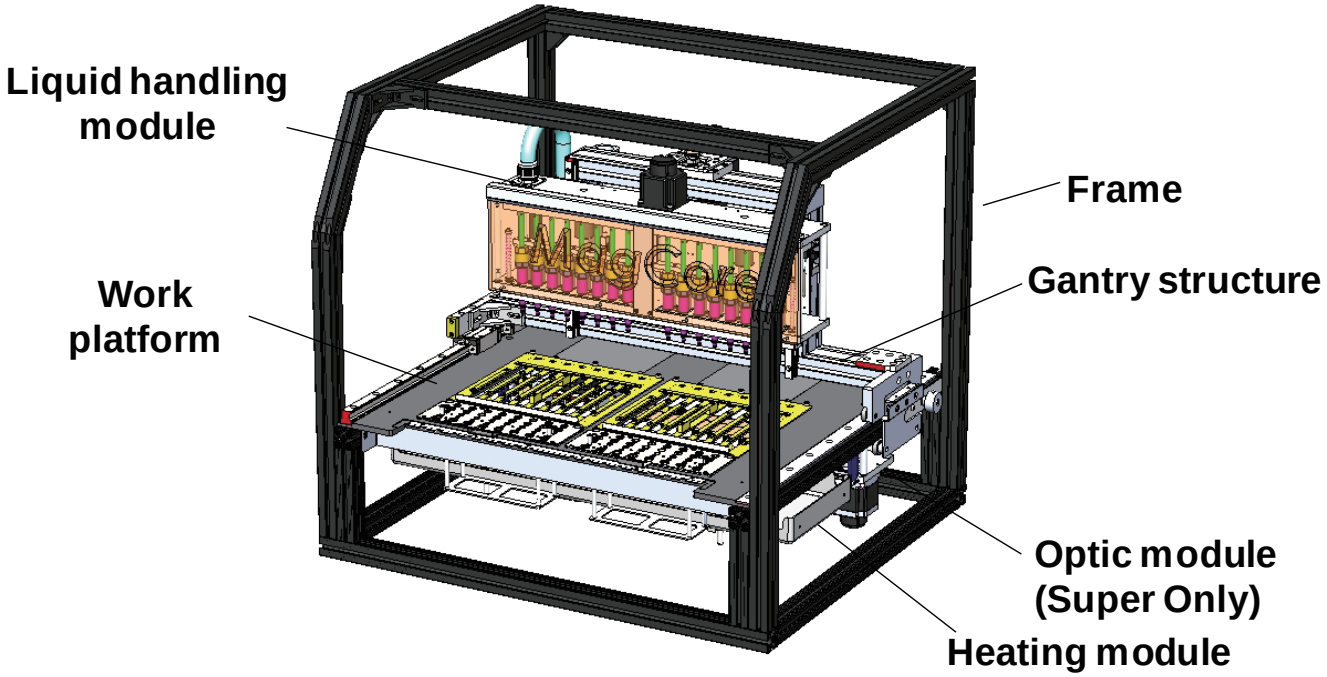

Unpacking

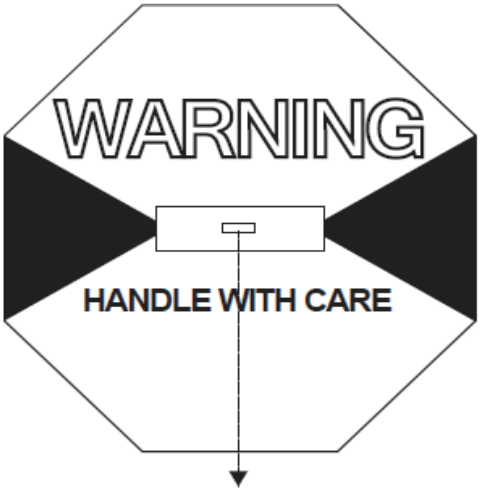

If the cargo is damaged, White Red

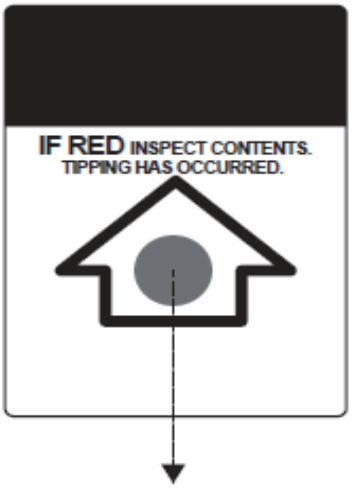

If the cargo is upside down, Silver Red

Prepare Unpacking Tools



1. *Hex Wrench (3mm)*



2. Phillips Screwdriver



3. Scissors

Install MagCore® HF16 Plus/Super

Proceed installation procedures after placing the instrument on a solid bench-top.
1.Use screw drivers to loosen the screws as shown in the picture.
2.Remove the red fixing plates.
3.Save all the materials for maintenance for future use.

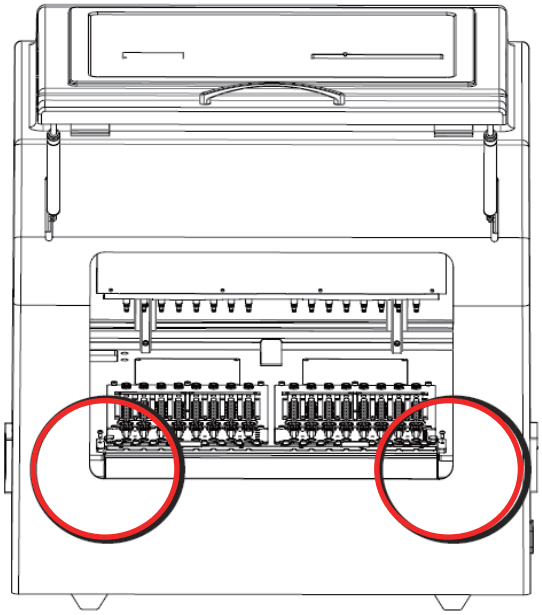



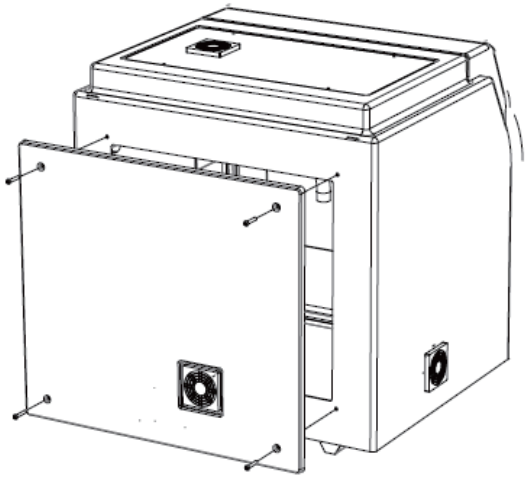



– Installation settings and test

Step 1.
Please set up the local time.

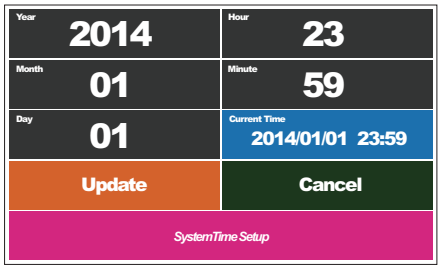

Please refer to System Status chapter for the information about the operation.
(Please refer to P.28)

Step 2.
Test piston

Please refer to Piston Test chapter for the information about the operation.
(Please refer to P.23)

Step 3.
Test heater

Please refer to Heater Test chapter for the information about the operation.
(Please refer to P.26)

Step 4
Test optic module
(MagCore® Super Only)

Please refer to Optic Test chapter for the information about the operation.

When the optic module test is finished, please compare the result with the reference sheet to make sure the optic module is functioning properly. (Please refer to P.82)

Touch Panel and User Interface

Start
Execute the extraction process

Barcode
Barcode scanning, editing, printing functions
(optional for MagCore HF16 Plus)

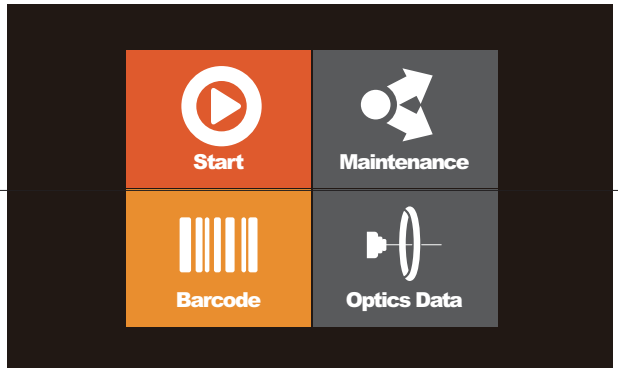

Maintenance
Easy maintenance and system settings

Optics
Optics data browsing and output functions
(MagCore Super only)

MagCore® Super / HF16 Plus provides 7-inch full-color touch panel and easy-to-use user interface. The operation screen will show the current status, ending time and test report of the machine. The above figure shows the function list of the operation screen and the description of the status icons.

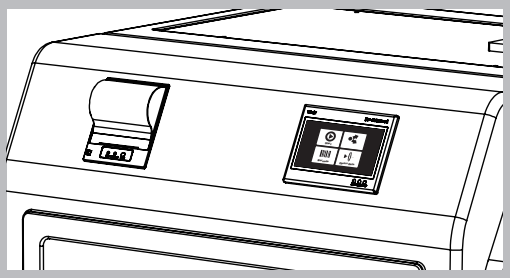

− Install MagCore® Cuvette

(MagCore Super Only / for optic test)

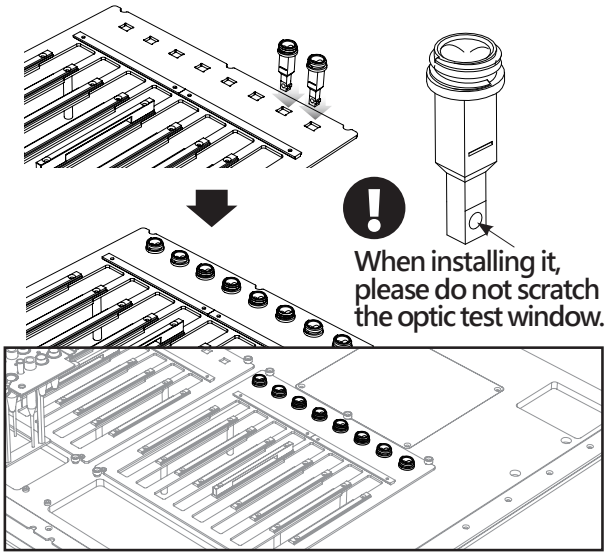

When installing it, please do not scratch the optic test window.

1. Please put MagCore® Cuvette into the corresponding sample's well. The installation of Cuvette is unidirectional. It is not possible to put it into the well if the direction is not correct.
2. Put the 200 µl SP tip into the W4 of the T-Rack.

− Install reagent cartridge

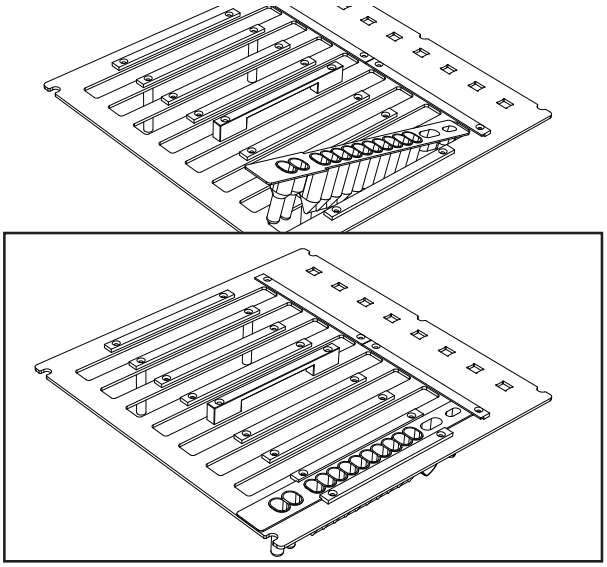

Please insert the front end of the cartridge into the space below the fixing plate of the Cartridge Rack.

Please insert the Cartridge Rack before the T-Rack.

− Install Tube, Tip

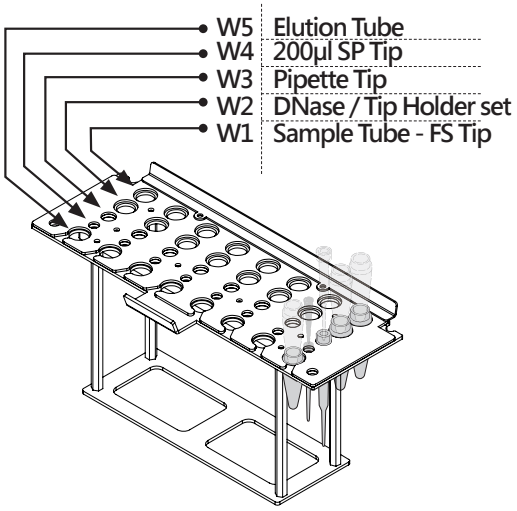

1. Put the tip into the corresponding well according to the left figure.
2. Put the T-Rack into the machine.

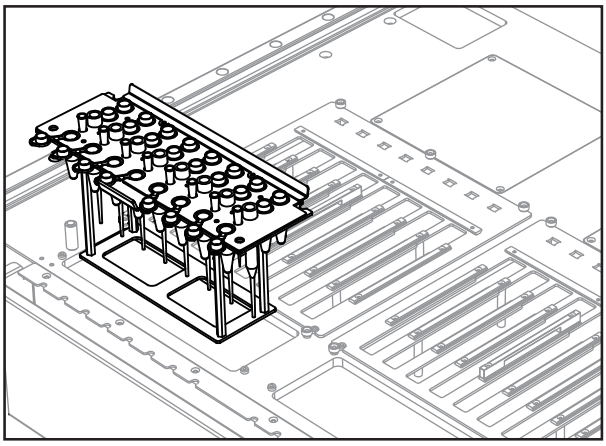

Please install the Tip and Tube according to the instructions on the extraction kit user manual.

Warning :

Please do not use the Tips and Tubes that are not provided by the original manufacturer. The test result may be not correct and the machine may be damaged due to different tip designs.

– Emergency Stop

Please read the security information to correctly stop the machine when an accident takes place.



When an emergency situation occurs and the machine is still running, please press the stop button or open the door of the machine to stop the machine immediately.

– Start Programs

1

Please pretreat the sample according to the instructions on the MagCore® extraction kit user manual and put consumables into the machine.

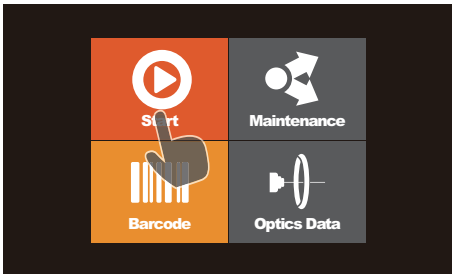

Press Start to go to the next step.

2

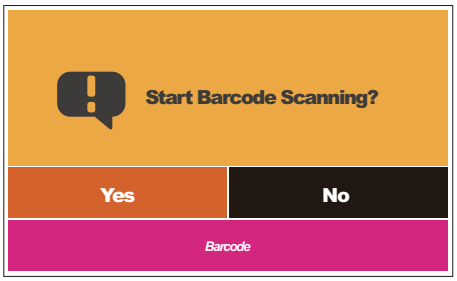

System will ask you whether or not to scan the barcode.

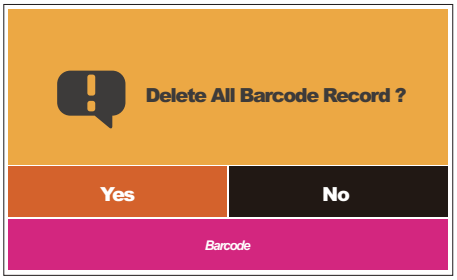

If there is a barcode record from previous test processes, the system will ask you whether or not to delete the previous barcode record. If there is no barcode record, the system will not ask you. (MagCore Super only; optional for HF16 Plus)

3

Please confirm the number of the reagent set which you install.

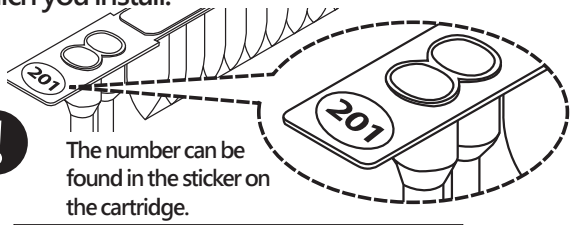

The number can be found in the sticker on the cartridge.

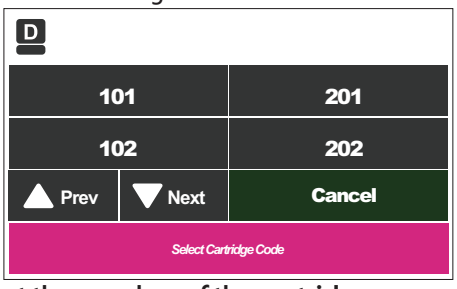

Select the number of the cartridge.

4

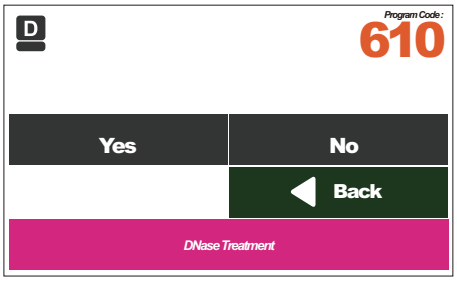

Select DNase Treatment. (Only for RNA kit.)

5

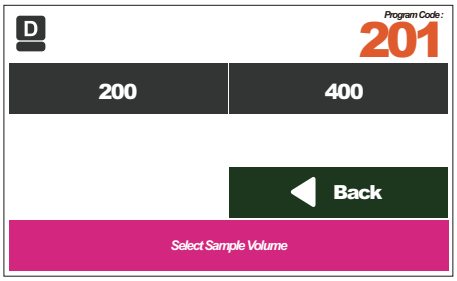

Select Sample Volume.

6

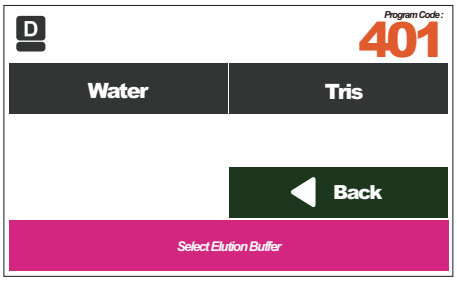

Select Elution Buffer. (Only for tissue kit.)

7

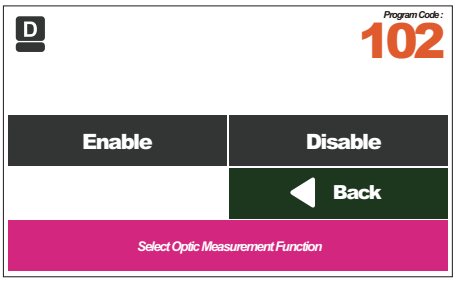

Select to enable or disable the optic measurement function. (MagCore Super Only)
(201, 202, 211, 105 without the function)

8

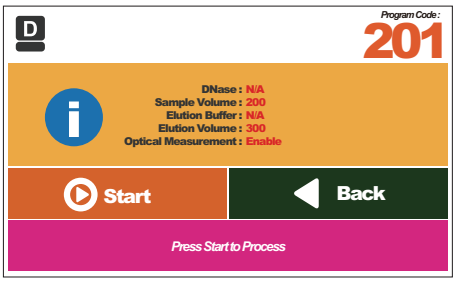

Please confirm the parameters and press the Start button to execute the program.

9

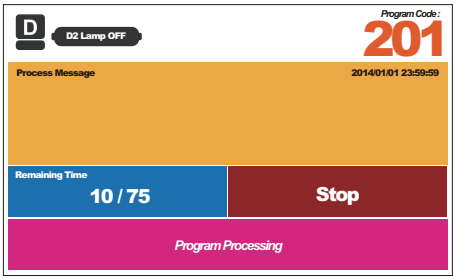

Automatic extraction process.

10

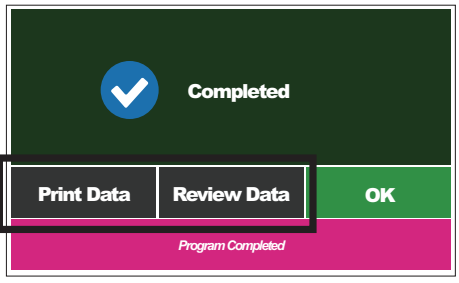

The extraction process is completed.

If you select the optic measurement funtion, you can browse, print or output the test result to a USB Flash Drive (please refer to the optic data chapter).

– If the test result of the optic measurement is over detection

(MagCore Super Only)

1

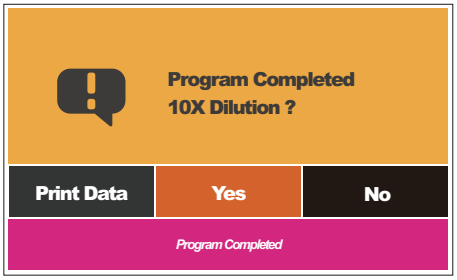

A.Please record and save the current measured data.

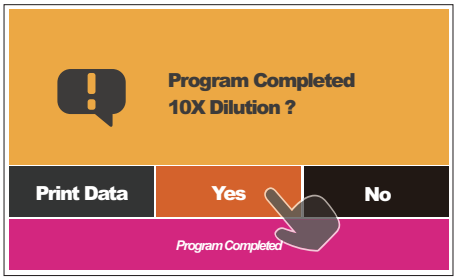

Please select YES.

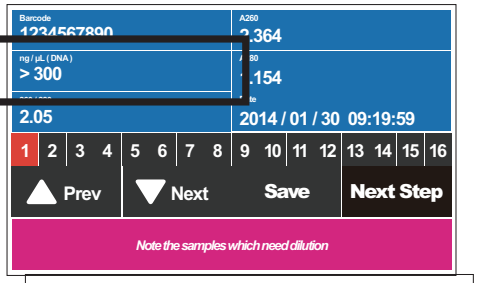

The values are DNA >300 ng/µl / RNA > 240 ng/µl

Please check the value of each sample. If there is a value showing DNA >300 ng/µl or RNA > 240 ng/µl, please record the number of the sample. It means the sample needs to be diluted. After recording the number of the slot, please insert the USB Flash Drive and press the Save button to save to current measured data. After finishing the above steps, please press Next Step.

Please save the data in the USB Flash Drive and transfer to computer, or the data in the USB Flash Drive may be overwritten later.

File name: OpticsSampleData.cvs

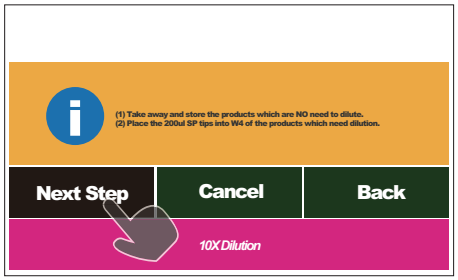

B.Prepare to dilute

1. Please take out the eluates which do not need to be diluted.
2. Please put a new 200µl SP Tip in the W4 corresponding to the sample to be diluted.
3. Press Next Step to continue the process.



Please confirm and press Start to dilute it.



Diluting.

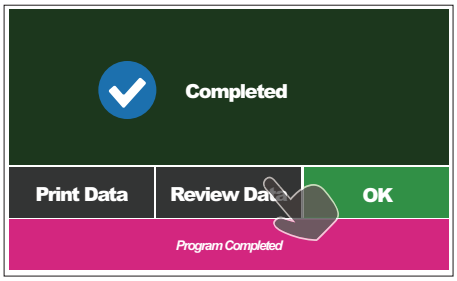

The diluting process is completed; please press Review Data to show the measured value after dilution.

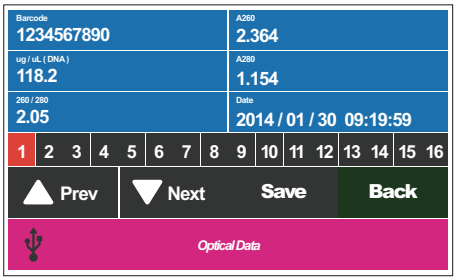

C. Record and save the measured values.

1. Insert the USB Flash Drive and then press the Save button to save the current measured values after the USB icon shows in the status bar. Please take out the USB Flash Drive and you can perform other operations after the icon of USB Flash Drive disappears.
2. The file saved last time and this time will be kept in the machine.

If the file saved last time is lost, you can retrieve this file according to the instructions in optic test data chapter.

Please save the data in the USB Flash Drive and transfer to computer, or the data in the USB Flash Drive may be overwritten later.
File name:
OpticsSampleData.cvs

Previous file name:
Pre_OpticsSampleData.cvs

– Stop

1

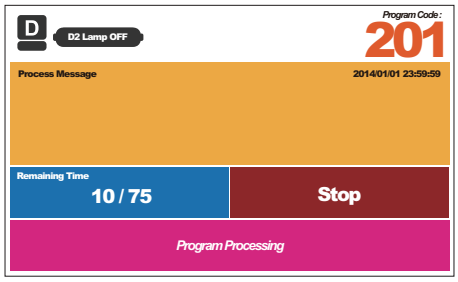

During the test process, please press the Stop button if you want to pause.

2

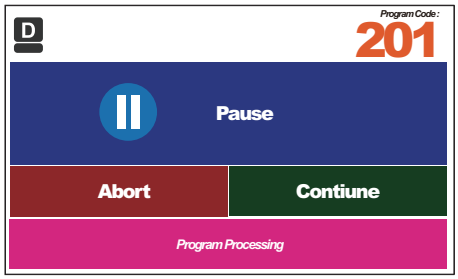

Please press the Abort button if you want to end the test.

3

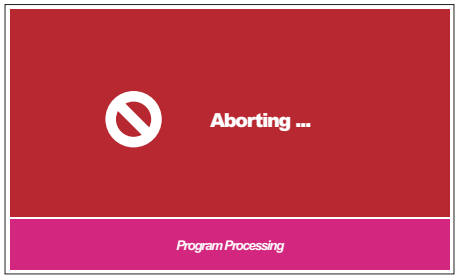

The test is aborting, and the machine is returning to the initial position. Please do not operate the machine during the process.

4

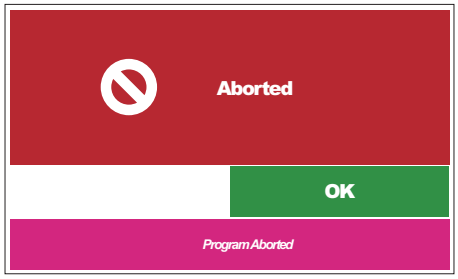

The machine has been stopped and reset, please press the OK button to go back to the main menu.

– Enable the barcode function

(MagCore HF16 Plus Only)

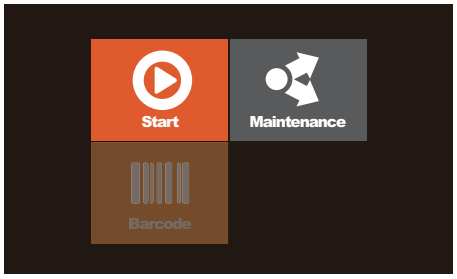

The barcode function of MagCore HF16 Plus is not enabled by default. If you already purchased the barcode scanner, you have to enable the scanner function.

1

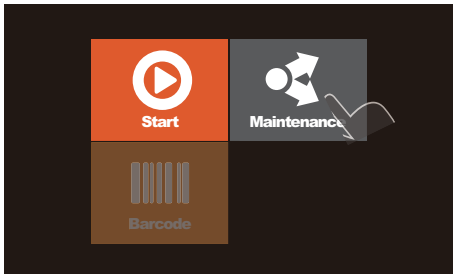

Select maintenance.

2

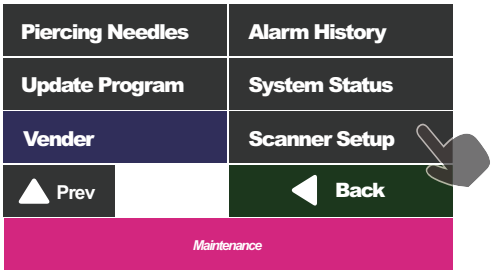

Select Scanner Setup.

3

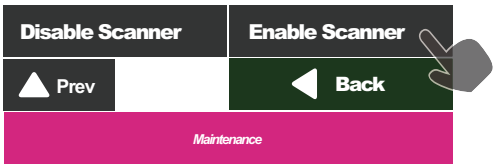

Select Enable Scanner.

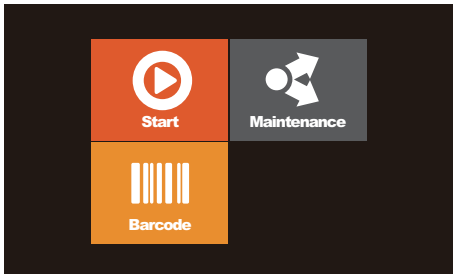

The Barcode function is enabled.

– Barcode scanning and editing

(optional for MagCore HF16)

1

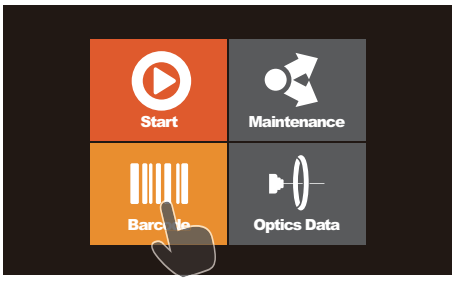

Please select the Barcode button in the main menu.

2

[Barcode main menu]

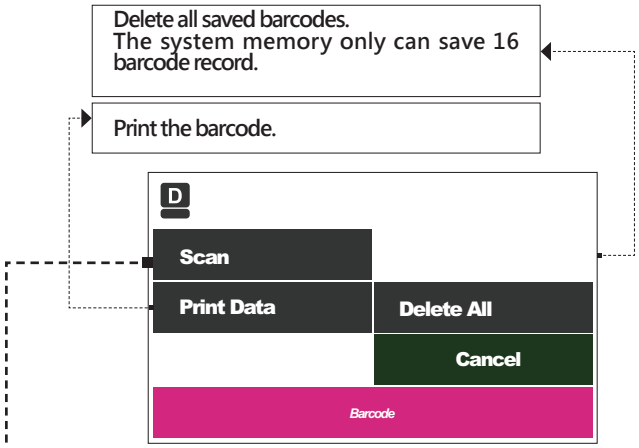

Please press the Scan button if you want to scan it.

3

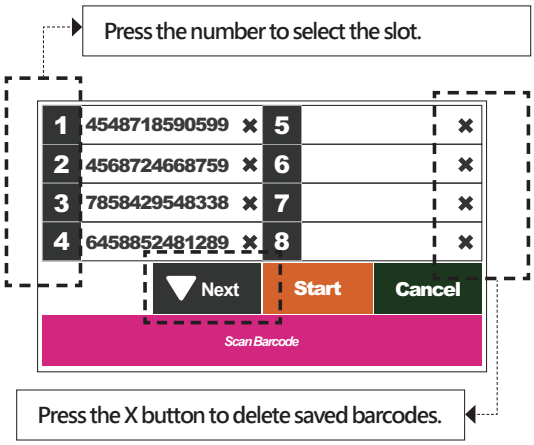

You can press the Start button to execute the test after scanning.
Please refer to the System Overview chapter for the information about the numbers of the wells to be scanned.

– Optic data

(MagCore Super Only)

1

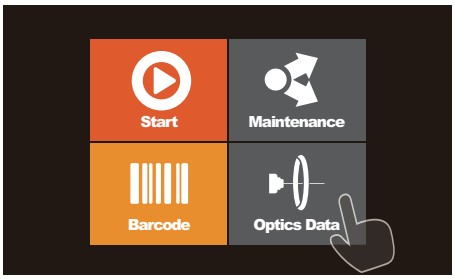

Please select the Optics Data button in the main menu.

2

[Optics Data main menu]
The machine will automatically save two batches of data in the memory.

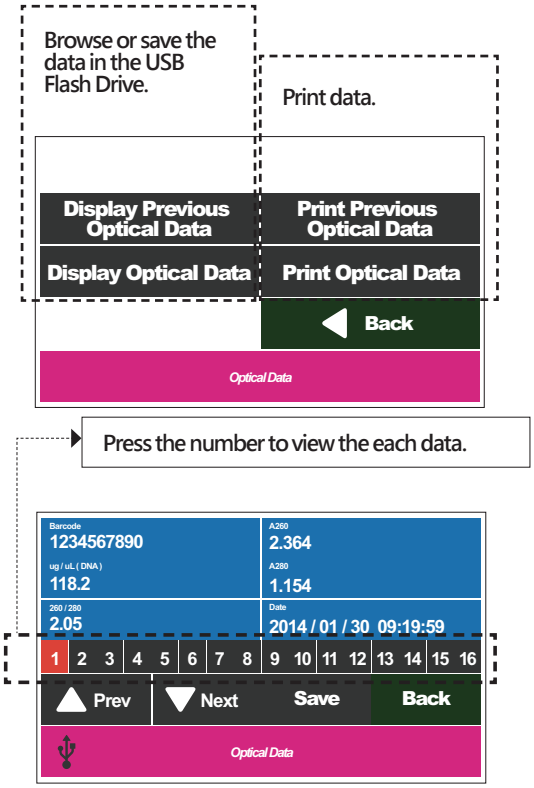

Save file
Insert the USB Flash Drive and then press the Save button to store the current measured values after the USB icon shows in the status bar. Please take out the USB Flash Drive and you can perform other operations after the icon of USB Flash Drive disappears.
Please refer to the System Overview chapter for the information about the numbers of the slots.

Please save the data in the USB Flash Drive and transfer to computer, or the data in the USB Flash Drive may be overwritten later.

File name:
OpticsSampleData.cvs
Previous file name:
Pre_OpticsSampleData.cvs

Easy maintenance

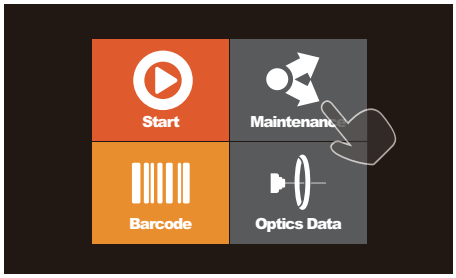

Easy maintenance includes the maintenances which need to be done by users. These items include sterilization, clearing, simple test and error message report, etc. Users must perform these items periodically to ensure the system is functioning properly.

– Replace O-Ring

1

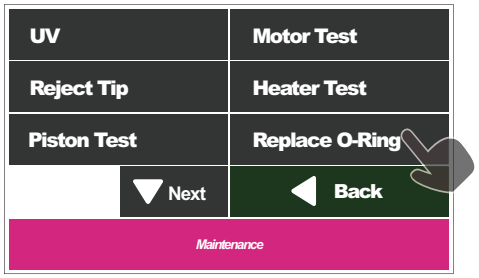

Please select the Replace O-Ring button.

2

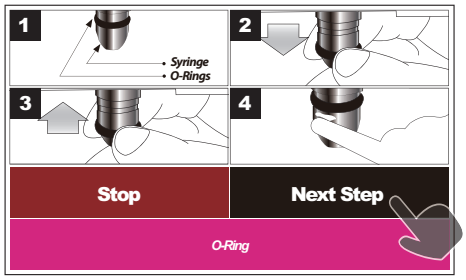

1. Please disassemble the damaged O-Ring.
2. Replace with a new O-Ring.
3. Grease the O-Ring, and perform the Piston Test.

– Piston Test

The Piston test includes the tests for three Tip types, which mainly test the if the piston is smooth at taking all three types of tips from the T-rack.

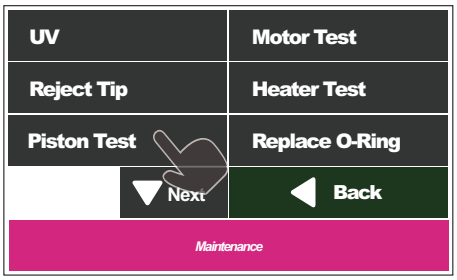

Please select the Piston Test button.

Maintenance:

Please perform the Piston Test once a month and grease on the O-Ring.

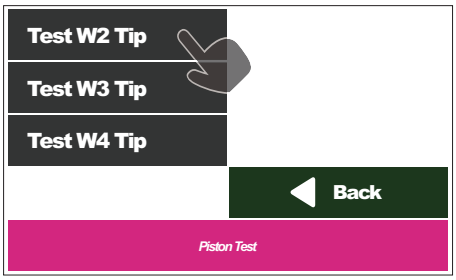

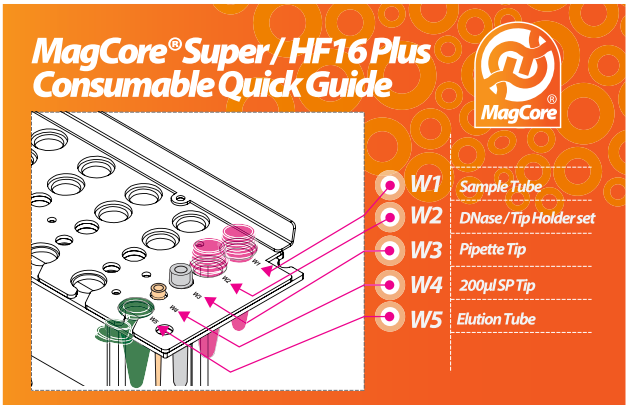

A. Test the Tip of the W2.

1. Please put the Tip Holder Set (not provided in accessary) into W2 of T-Rack.
2. Please add 1 ml water to the Sample Tube and put it in W1 of the T-Rack.
3. Please select the Test W2 Tip.

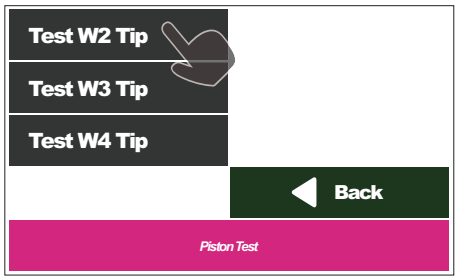

4. The test can be divided into two stages. The first stage is to observe if the piston is smooth at taking the tips.

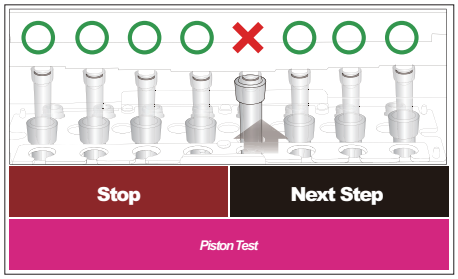

5. Please check whether the liquid levels of all tips are consistent with each other.

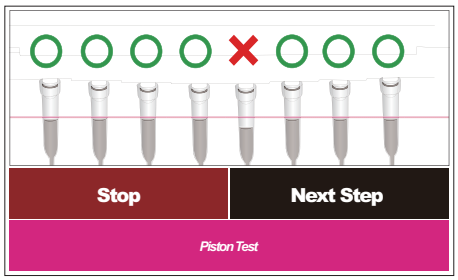

B. Test the Tip of W3.

1. Please put the Pipette Tip into W3 of T-Rack.
2. Please add 1 ml water to the Sample Tube and put it in W1 of the T-Rack.
3. Please select Test W3 Tip.

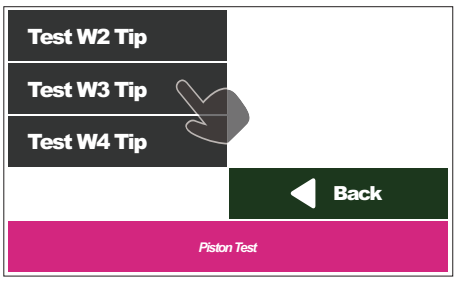

4. Please check whether the liquid levels are consistent with each other. If the liquid levels are not consistent with each other, please check the O-Ring (Please refer to the Replace O-Ring chapter for more information).

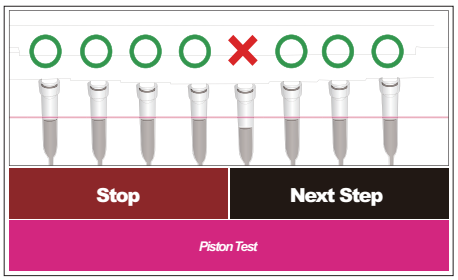

C. Test the Tip of the W4. (MagCore Super Only)

1. Please put the 200µl SP Tip into W4 of T-Rack.
2. Please add 1 ml water to the Sample Tube and put it in W1 of the T-Rack.
3. Please select Test W4 Tip.

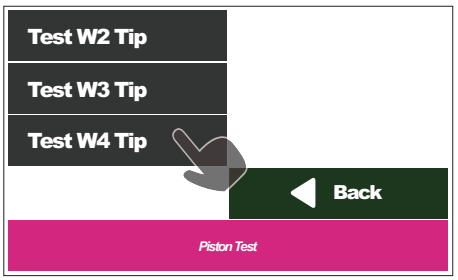

4. Please check whether the liquid levels are consistent with each other. If the liquid levels are not consistent with each other, please check the O-Ring (Please refer to the Replace O-Ring chapter for more information).

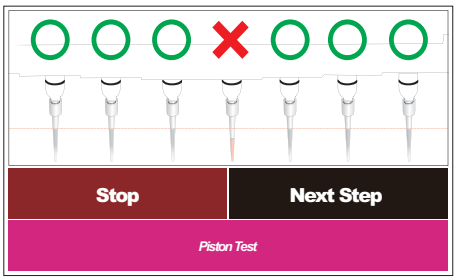

Clean Piercing Needles

1

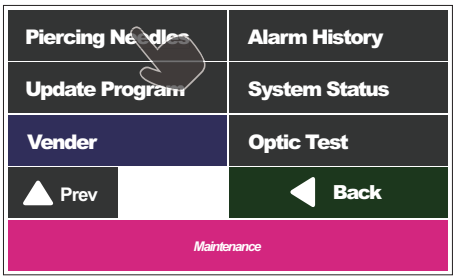

Please select Piercing Needles.

2

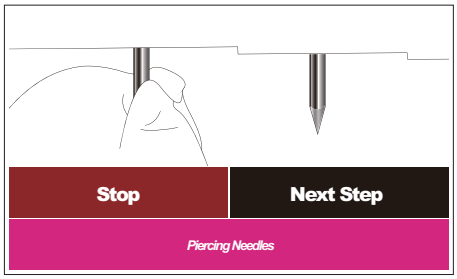

1. Please prepare a soft cloth with 70% alcohol.
2. Please clean the Piercing needles by the cloth.

Warning!

The tips of the Piercing Needles are extremely sharp. Please clean them carefully.

Reject Tip

If the system is stopped from power shortage or other abnormal conditions and the tips are still on the pistons, you have to press Reject Tip to remove the tips from the pistons.

1

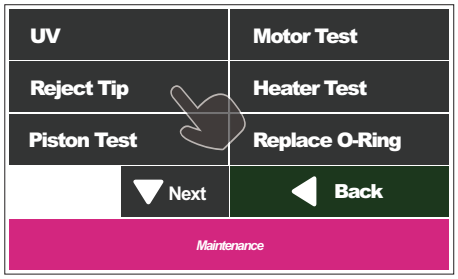

Please select the Reject Tip button.

Heater Test

Before testing the heater, please add 500µl water into the heat block well 1 (as shown by the arrow) of the cartridge, and then put the cartridge into the cartridge rack and put the thermometer in the water.

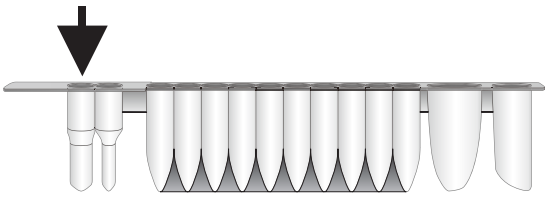

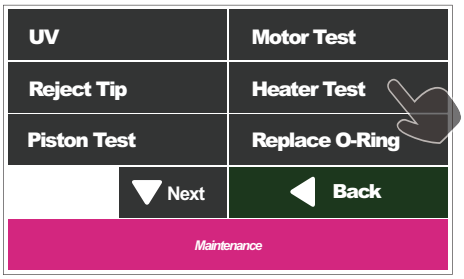

Please select the Heater Test button.

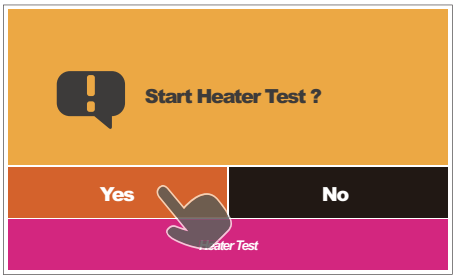

Please select Yes to start the test.

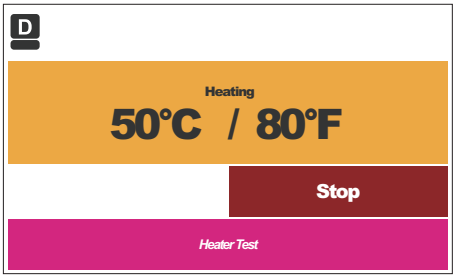

Now the heater will be heated up to 60° C, please check whether the temperature shown on the thermometer is consistent with that shown on the screen.
The acceptable temperature range is 60± 5° C.

Optic Test

(MagCore Super Only)

Please put the cuvette into the cartridge rack before the optic test without any liquid and not the 200µl SP tip.

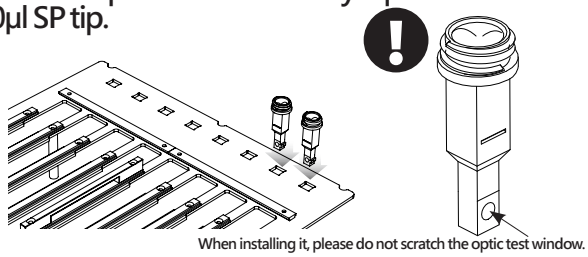

When installing it, please do not scratch the optic test window.

Please refer to the Install MagCore® Cuvette chapter.

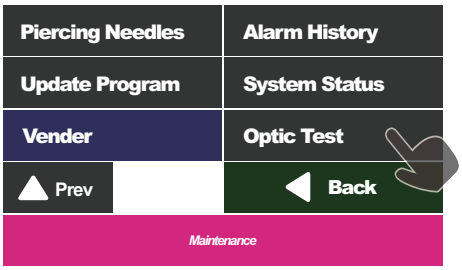

Please select Optic Test.

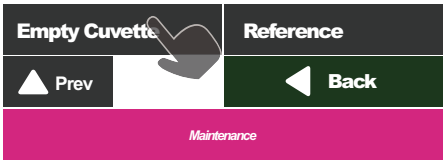

Please select the Empty Cuvette and then wait for 15 minutes to perform the test.

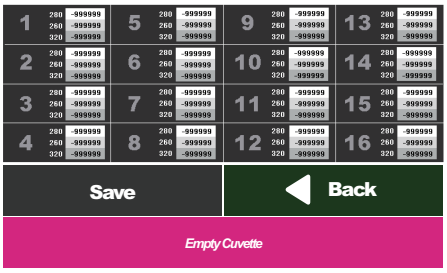

The test may take some time to wait for the D2 lamp to prewarm. The screen will show the measured values after the test is finished. You can insert the USB Flash Drive and press the Save button to store the current data after the USB icon shows in the status bar. Please take out the USB Flash Drive and you can perform other operations after the icon of USB Flash Drive disappears. The acceptable range of the optical result >7000

Please save the data in the USB Flash Drive in a personal computer, or the data in the USB Flash Drive may be overwritten later.

File name: OpticalCuvetteCount.cvs

– UV sterilization

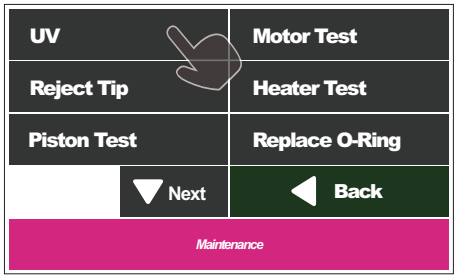

Please select the UV button.

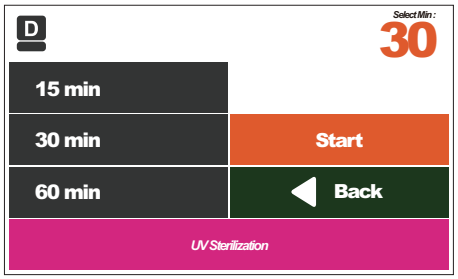

Please select the sterilization time.

Warning!

The UV lamp is dangerous. Please do not look straight into the machine during operation.

– Alarm History

If the machine is not functioning properly or if the following messages appears, the engineers may ask you to download the error records for them to diagnose the machine.

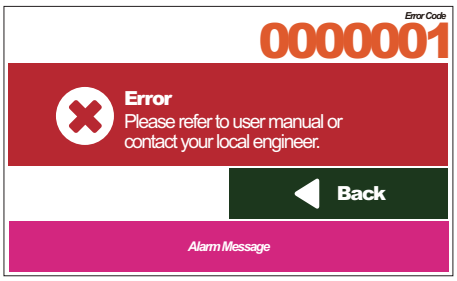

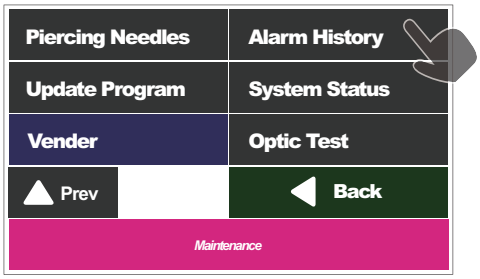

Please select Alarm History.

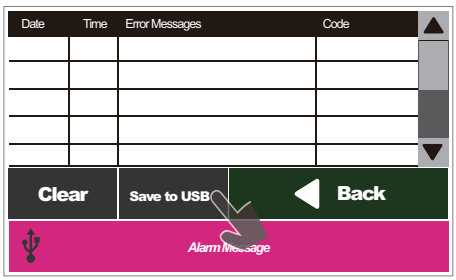

Save files
Insert the USB Flash Drive and then press the Save button to store the current data after the USB icon shows in the status bar. Please take out the USB Flash Drive and you can perform other operations after the icon of USB Flash Drive disappears.

Please save the data in the USB Flash Drive and transfer to computer, or the data in the USB Flash Drive may be overwritten later.

File name: AlarmHistory.cvs

– System Status

You can check the system status and set up the system time in the menu.

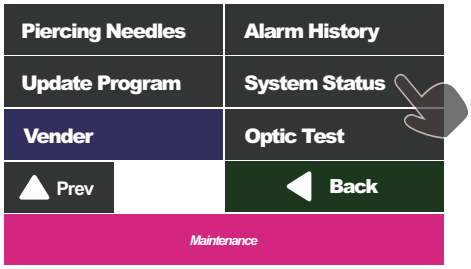

Please select System Status.

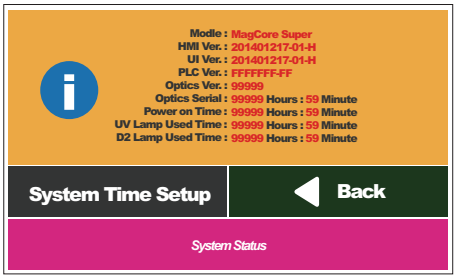

Information

Modle :	System model
HMI Ver. :	Human-machine interface version
Program Ver. :	Program version
PLC Ver. :	PLC version
Optics Ver. :	Optic module version (MagCore Super Only)
Optics Serial :	Optical module serial number (MagCore Super Only)
Power on Time :	The total time that the machine is powered on
UV Lamp Used Time :	The used time of the UV lamp
D2 Lamp Used Time :	The used time of the D2 lamp (MagCore Super Only)

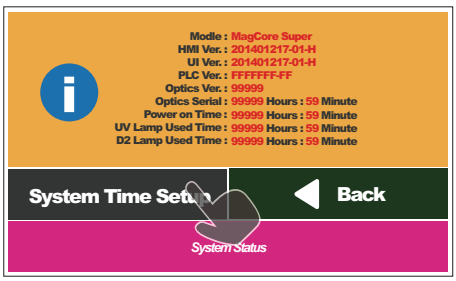

Select System Time Setup to set up the system time of the machine.

Set up the system time

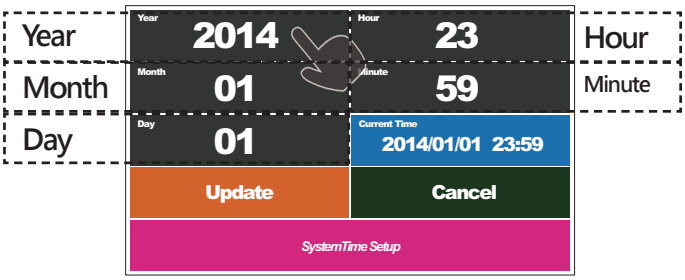

Please input the local date and time, then press the Update button to save . You can see the time that you changed in "Current Time" after the update is finished.

– Update Program

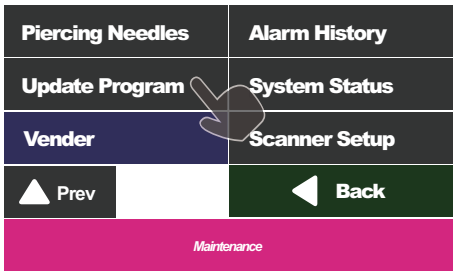

You can use the USB to update the system.

Please download and place a copy of the program in the root directory of the USB Flash Drive. Then insert the USB Flash Drive into the USB Port of the machine. Please press "Update Program" after the USB icon appears in the status list.

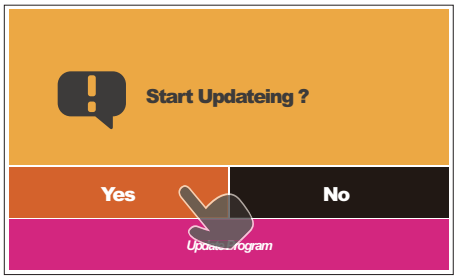

Please select YES.

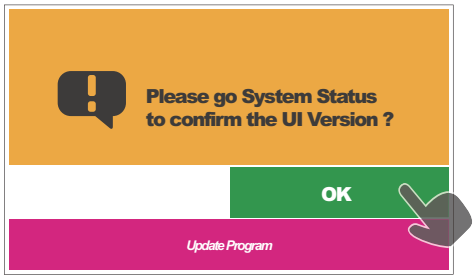

The update is finished, please press OK to check whether the UI version is correct.

Warning!

Please confirm the name of UI version. If the version is not correct, please execute the update program again.

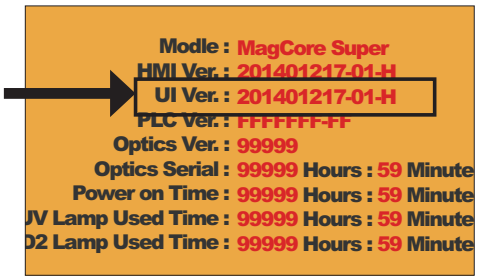

– Clean the Waste Box

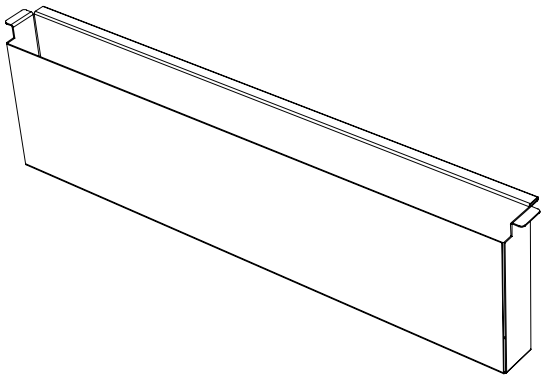

Please remove the waste when the program is completed and wash the waste box every day.

– Replace thermal paper

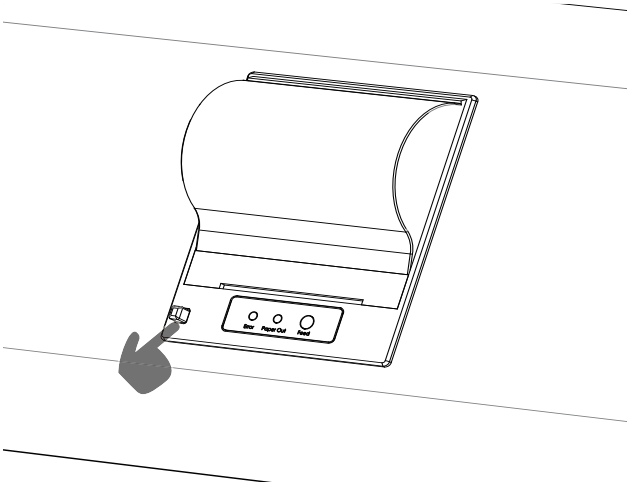

Open the cover of the printer and take out the thermal paper roll when the thermal paper runs out. Put a new thermal paper roll into machine according to the direction shown as the following figure and then close the cover of the printer.

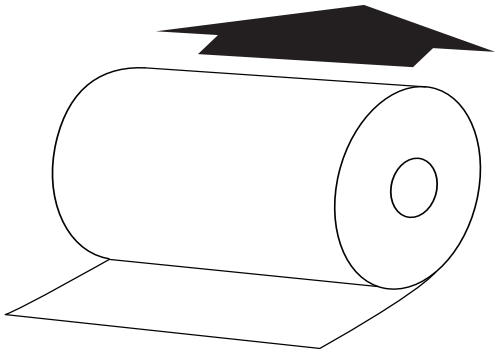

If the position of the thermal paper roll is not correct, the red/yellow lamp will flash. Please press the Feed button to confirm if the replacement is correctly done.

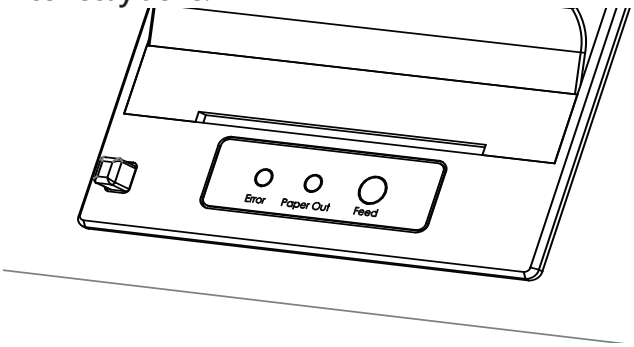

You can purchase the Cat. No.: MSP005 Thermal Paper from the local distributor.

– Replace fuse

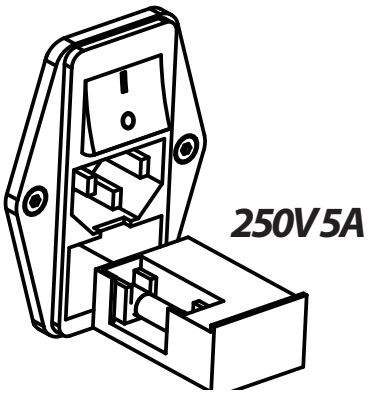

Please use the specific fuse. If you use the fuse with higher specification, the machine may be burned.



Advanced maintenance

Advanced maintenance includes system maintenance, component replacement and advanced machine calibration. Only trained engineers can perform the above operations.

Recommended frequency for maintenance

Frequency of use	Maintenance cycle
Less than 20 times a month	1 Year
1 to 3 times daily	Six months
More than 3 times a day	Three months

Caution !

Turn off the power and remove power socket before processing advanced maintenance !

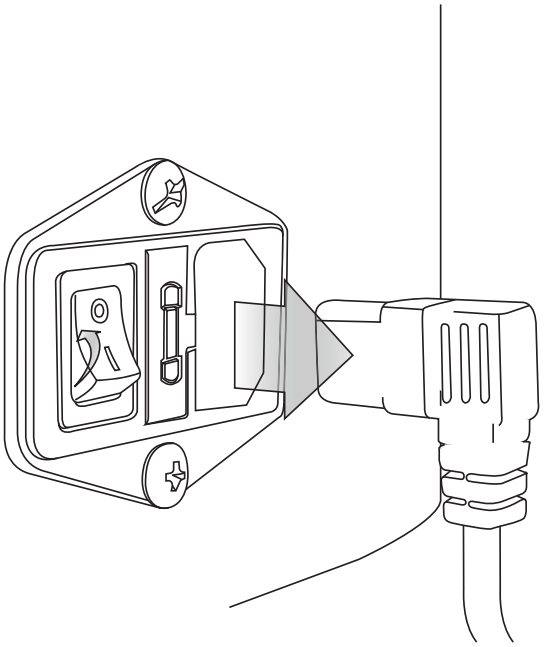

Caution !

All advanced maintanence must be performed by trained Engineers !

Disassemble the back service lid

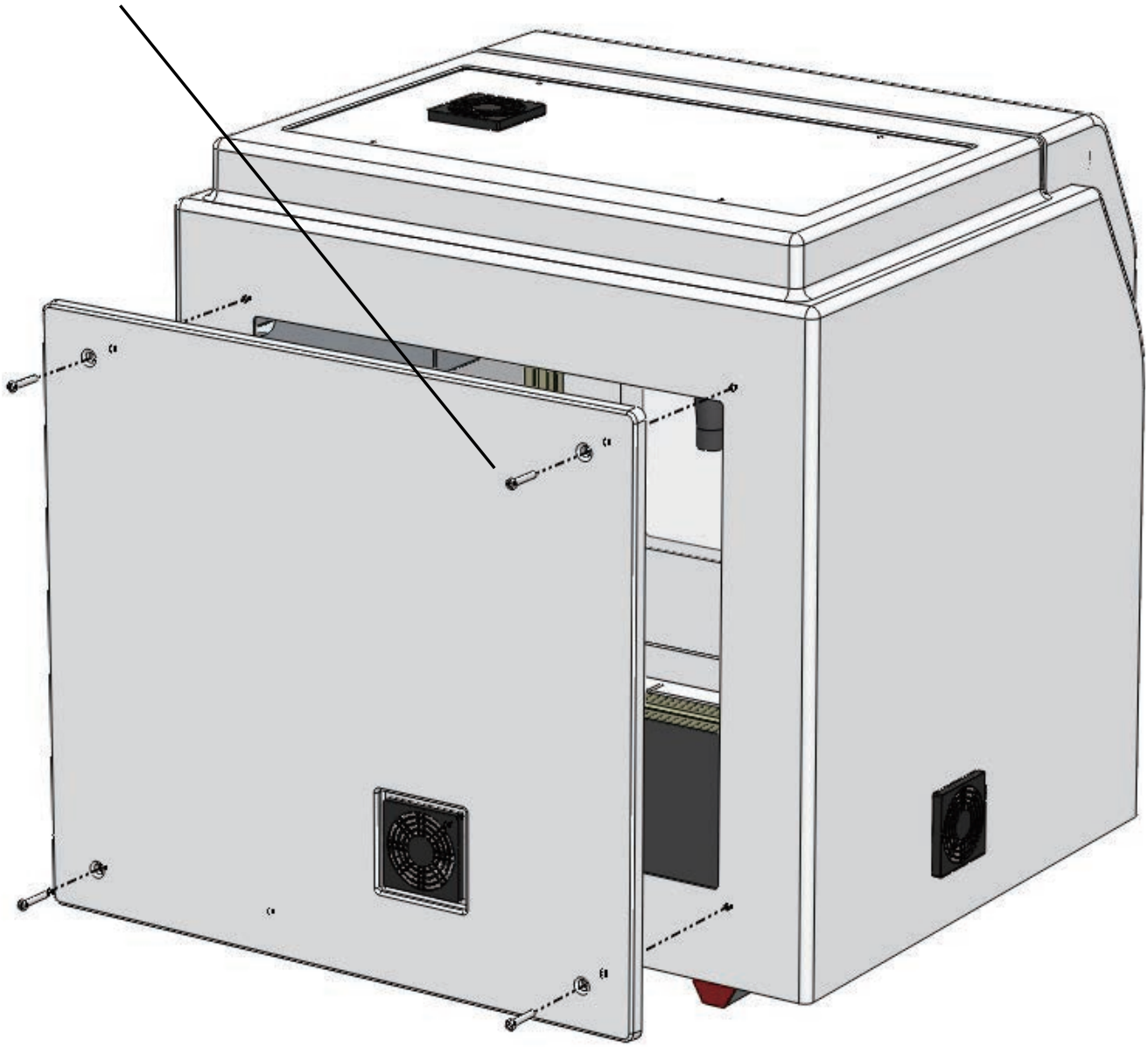

Disassemble the top service lid

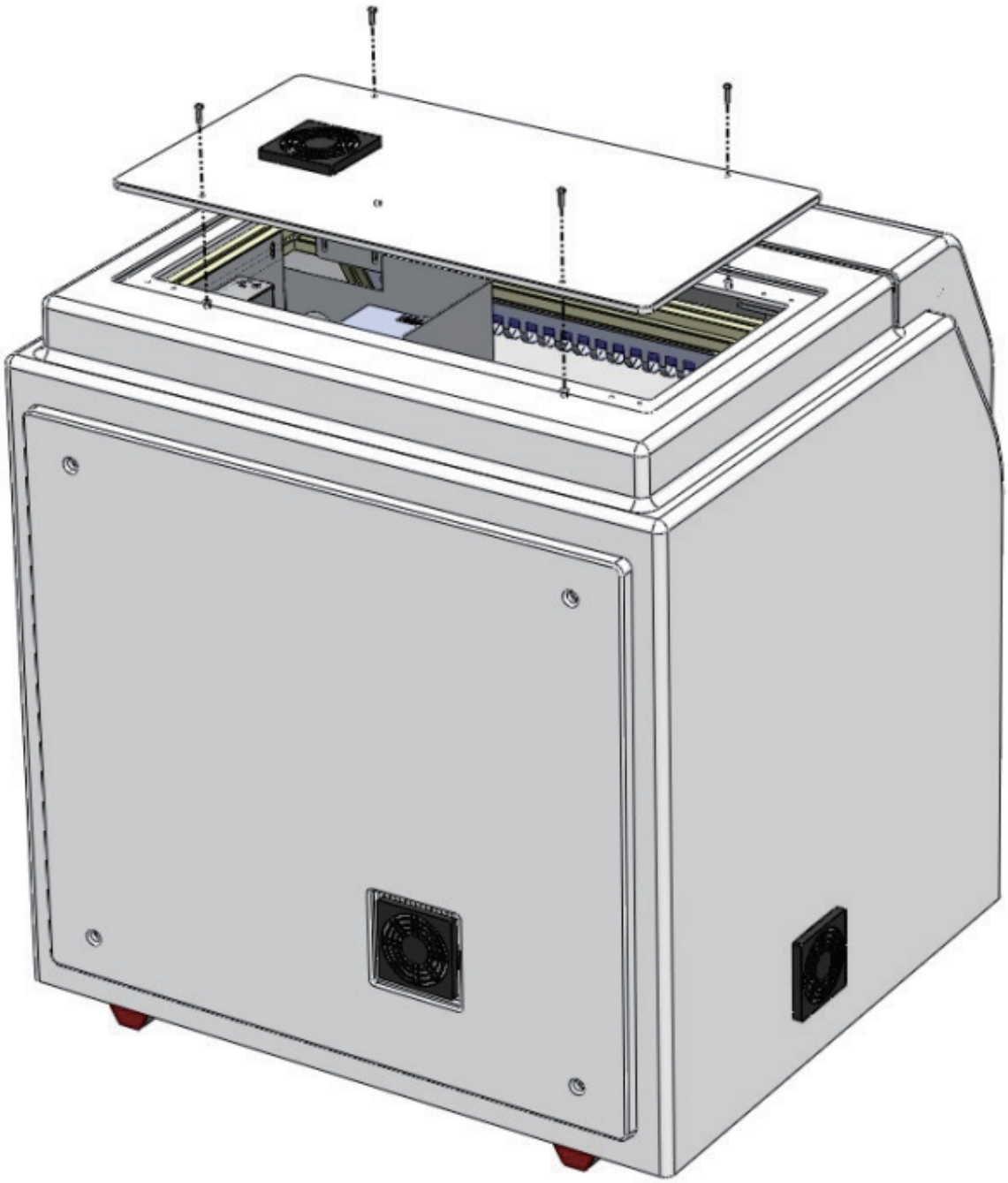

Axis directions

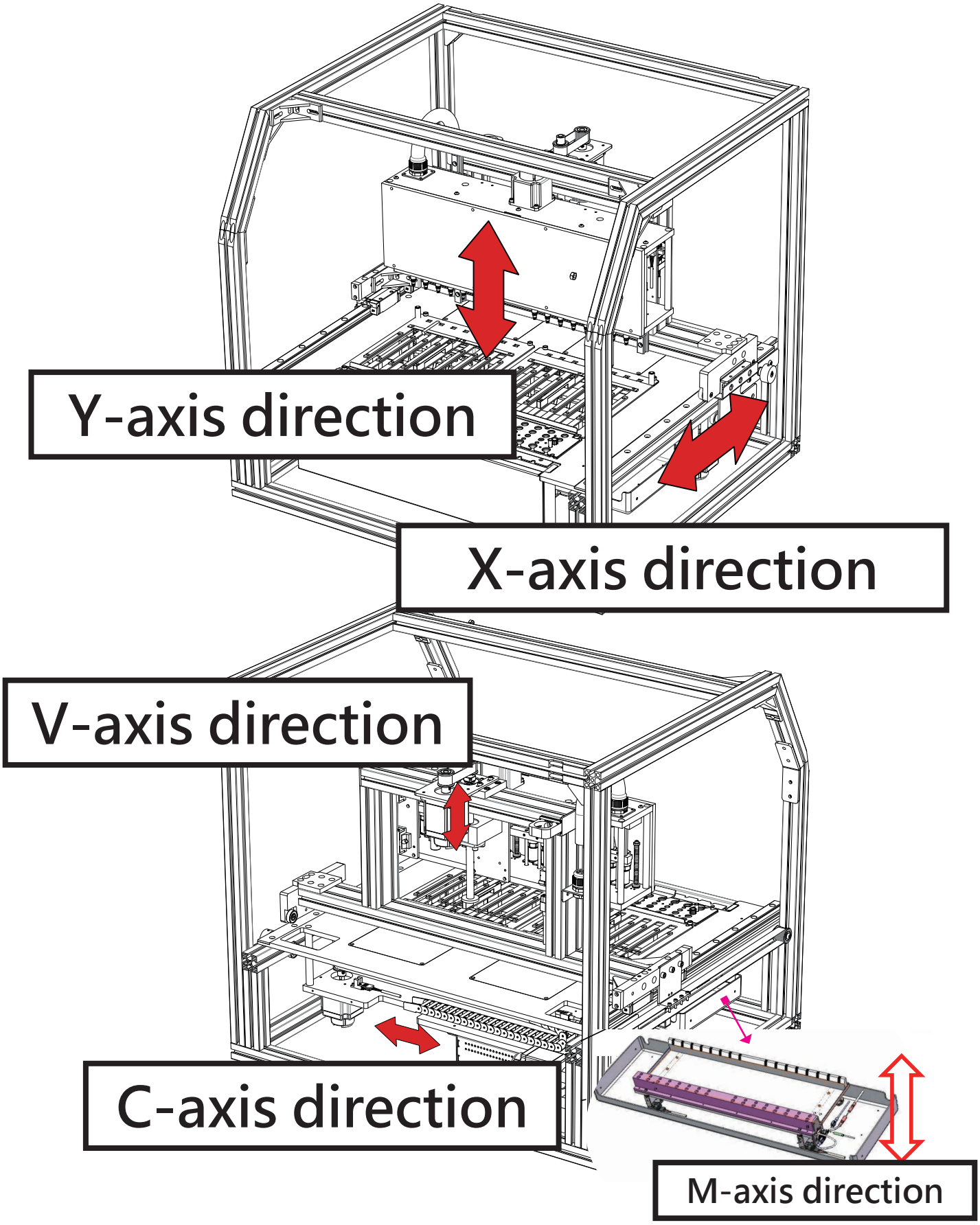

Replace the UV lamp

Open the front door.

1. Switch off the power supply.
2. Loosen the three screws of the protection metal sheet (4mm Hex wrench), and take off the sheet.
3. Replace the lamp and lock back all the parts.

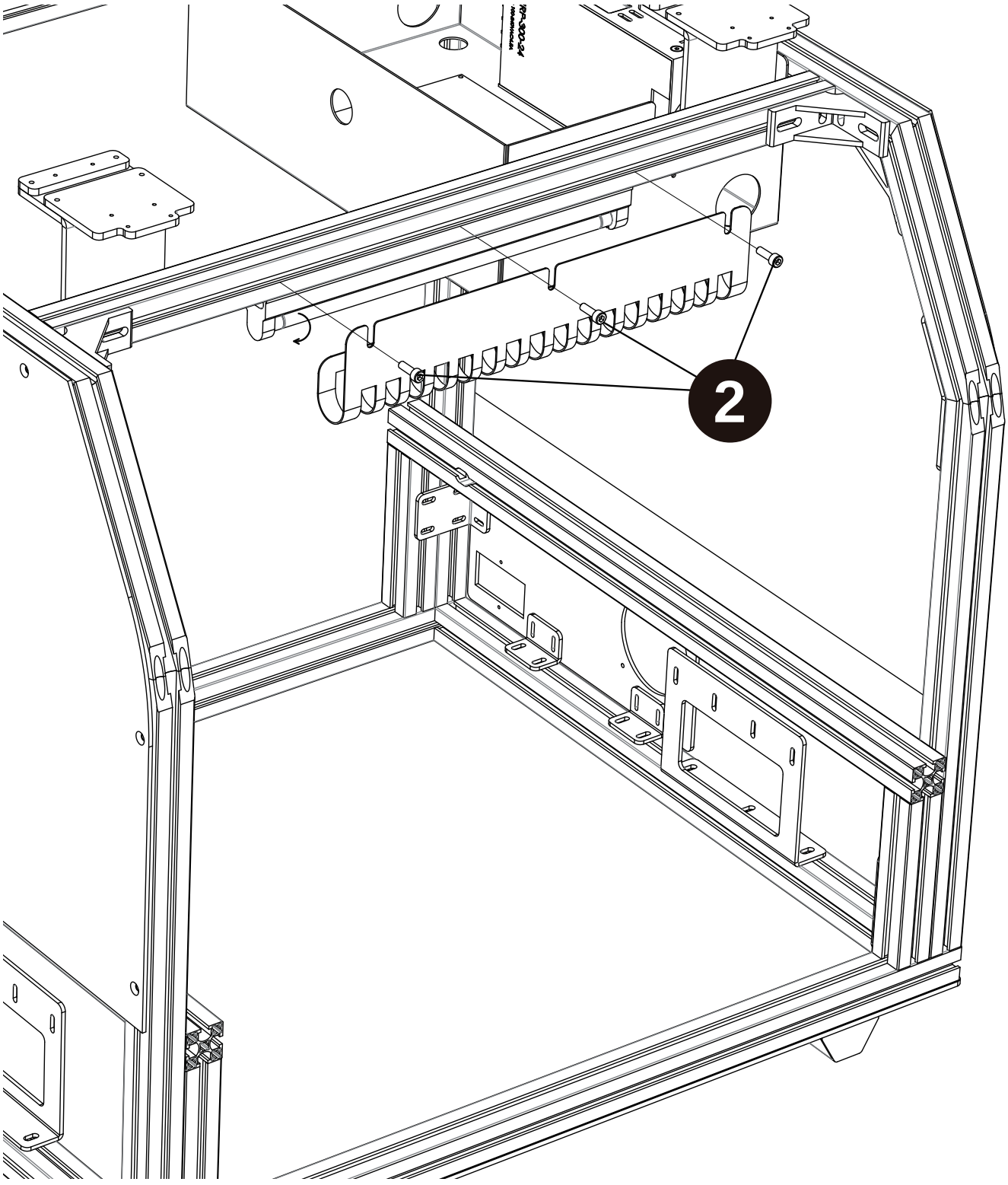

Replace LED Light

Open the front door.

1. Unplug the wire connector of the LED.
2. Loosen the three or five screws on the top of the piston module (3 mm Hex wrench), and take off the LED module.
3. Replace the LED light bar and lock back all the parts.

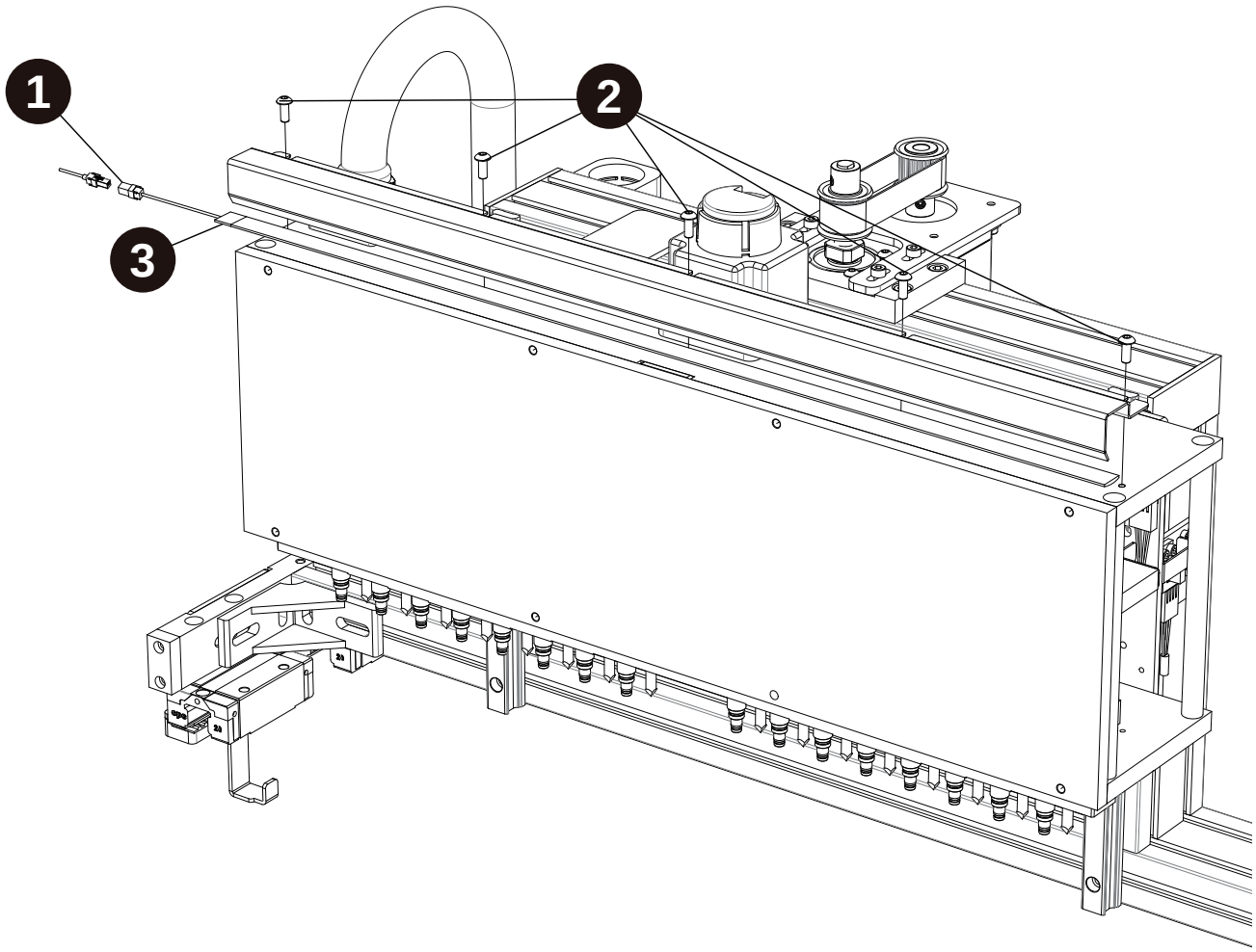

Replace the optic lamp (MagCore® Super Only)

1.Open the back service lid

2. Loosen four screws
on optic service lid

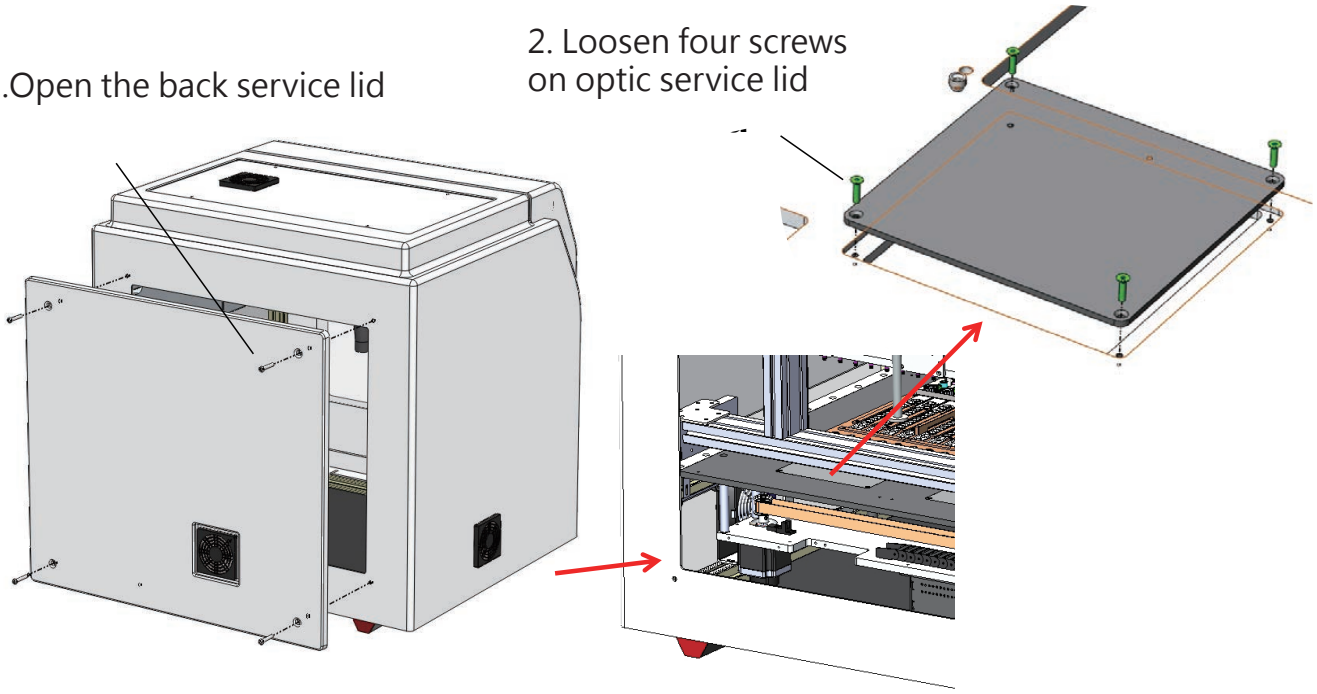

1.Disconnect the connector

2. Cut cable tie
(6 places)

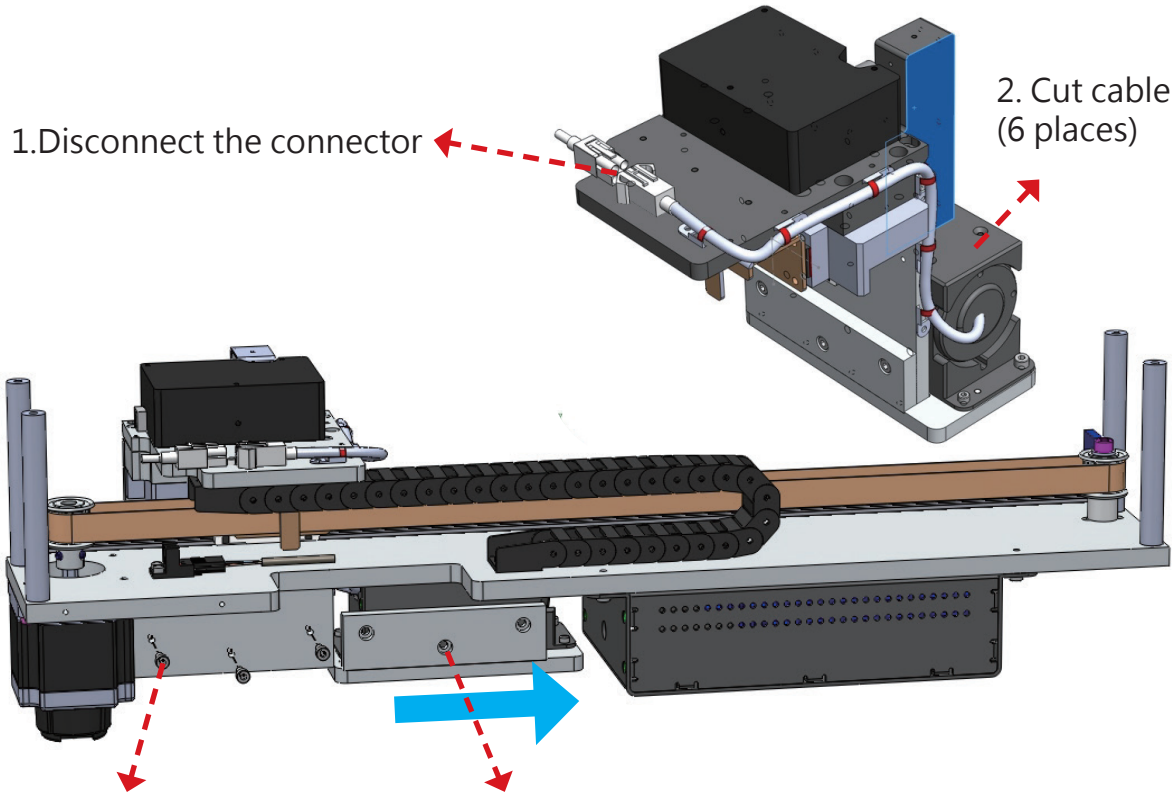

3. Loosen three screws

4. Move the deuterium lamp to the right side

Replace optic lamp power supply

1. Open back and top service lead.
2. Remove 2 leads from the rack. Unscrew 4 screws on each lead, lift them and remove to make cable tray visible.

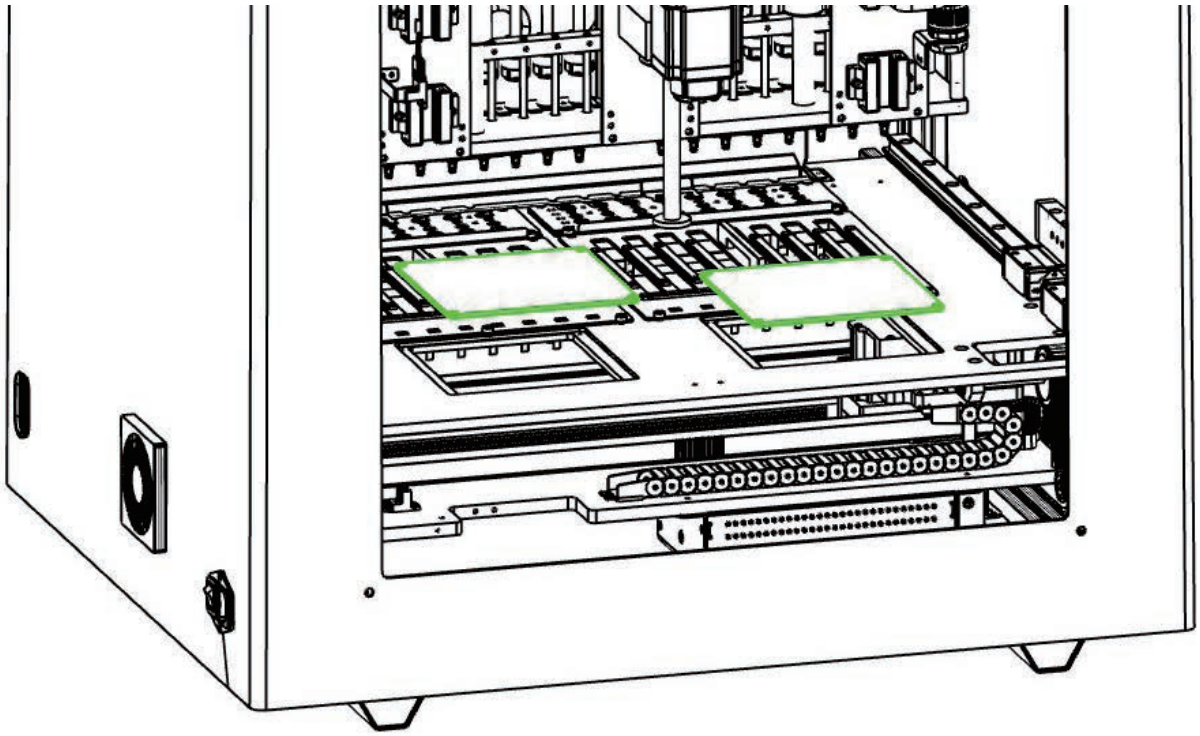

3. Push the lamp module aside to make sure the top of the cable tray is exposed. Use tools to remove connecting part on top of the tray until it is completely opened and cables can be easily removed. Hold the base of the tray and twist it to the side to remove it. Repeat on the other end of the tray.
4. Disconnect the cables.
5. Remove 4 screws; if needed remove the motor to create more space for operation.

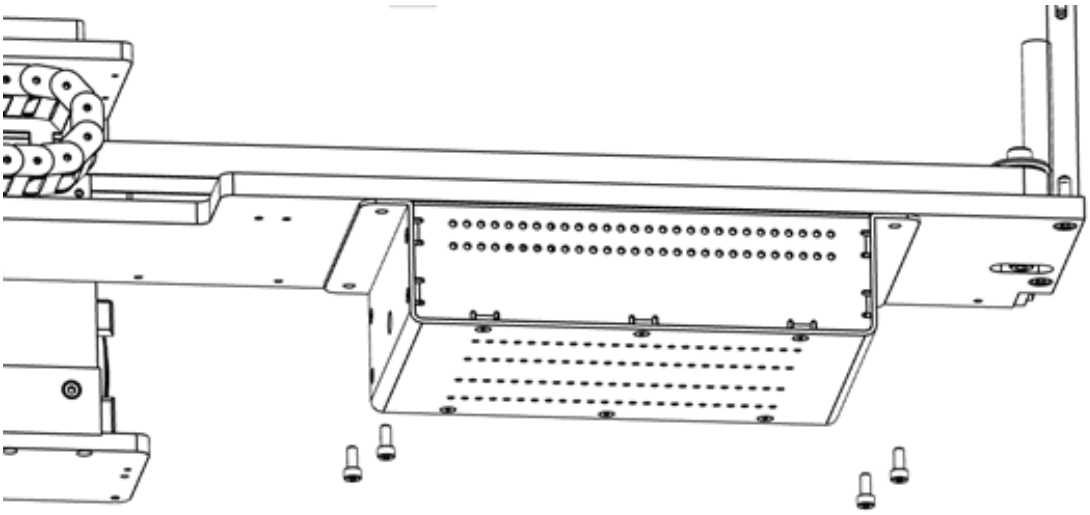

6. Remove old power supply.
7. Follow the steps in the reversed order to install a new power supply.

Replace the pistons

Open the front door.

1. Unplug the wire connector of the LED.
2. Loosen the three screws on the top of piston module (3mm Hex wrench), and take off the LED module.
3. Screw off the eight screws on the acrylic nameplate at the front side (2.5mm Hex wrench).
4. Screw off the four screws on the metal sheet (2.5mm Hex wrench).

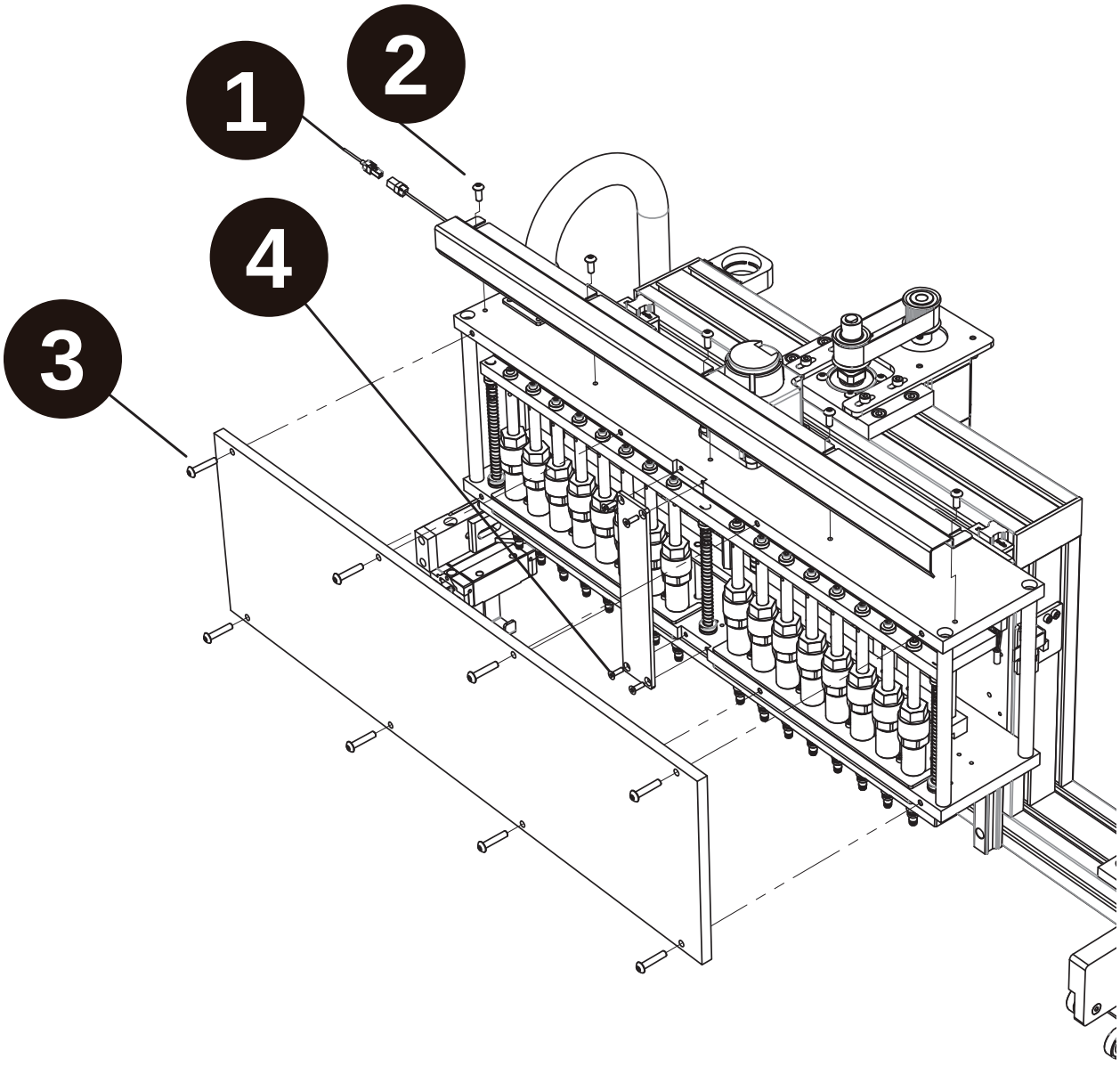

5. Press the V-axis downward until the tool can be put into the holes above the pistons.
6. Screw off the four screws (2.5mm Hex wrench).
7. Disassemble the fault pistons and replace with new pistons (2.5mm Hex wrench).
8. Screw up the four screws (2.5mm Hex wrench).
9. Screw up the screws above the piston (2.5mm Hex wrench).
10. Reinstall the acrylic nameplate on the piston module and the LED lamp on the machine.
11. After the above steps are finished, please perform the "Piston Test " to check if the replacement is successful.

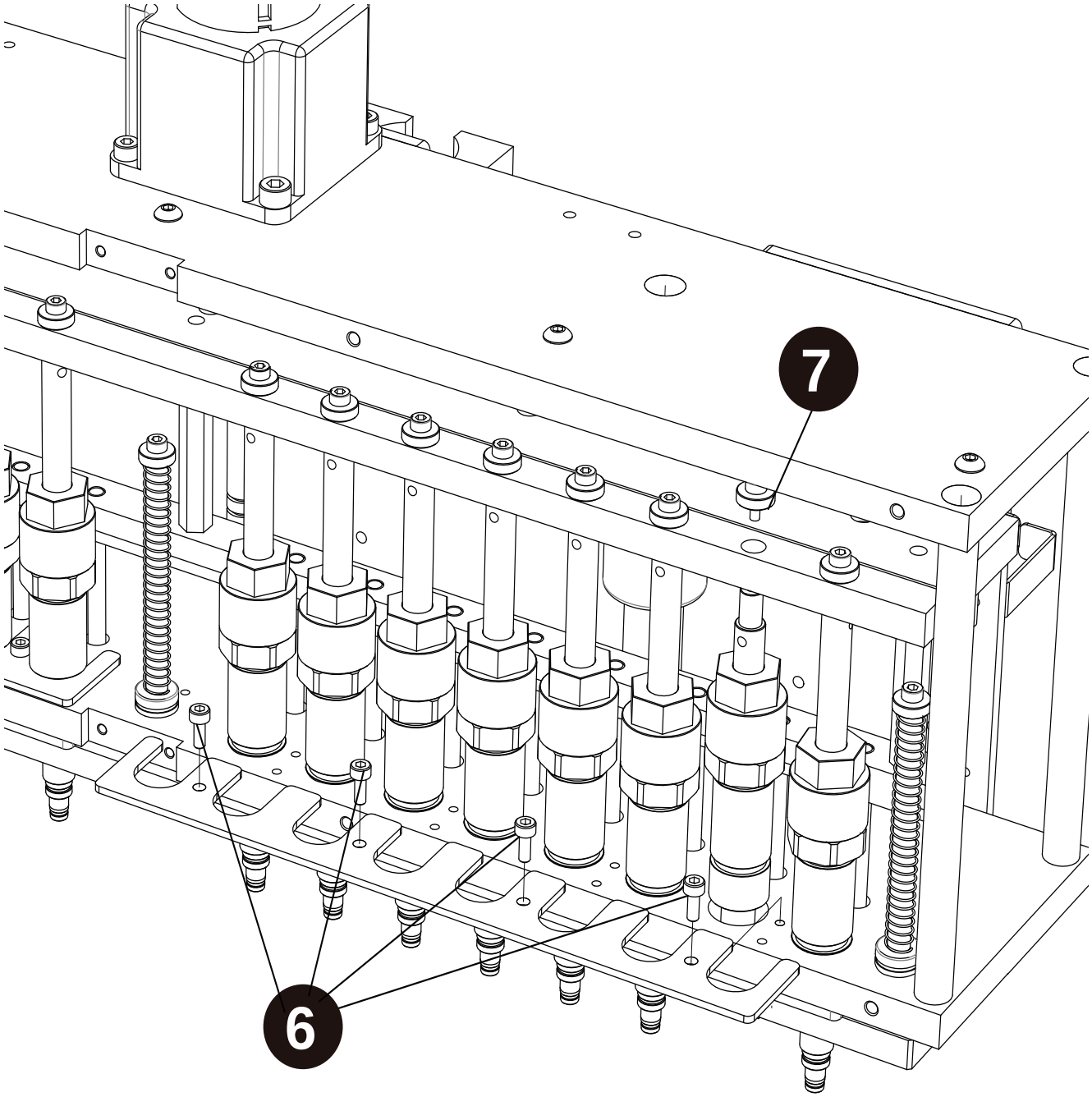

Replace the ejector rod module.

Open the front door.

1. Unplug the wire connector of the LED.
2. Loosen the three screws on the top of piston module (2.5mm Hex wrench).
3. Screw off the eight screws on the acrylic nameplate at the front side (3mm Hex wrench), and take off the LED module.
4. Screw off the four screws of the metal sheet (2.5mm Hex wrench).
5. Screw off the three screws of the axle core of the ejector rod (2.5mm Hex wrench).
6. Take out the ejector rods by pushing it downward.
7. Replace the ejector rods and reinstall the ejector rod module back in order.

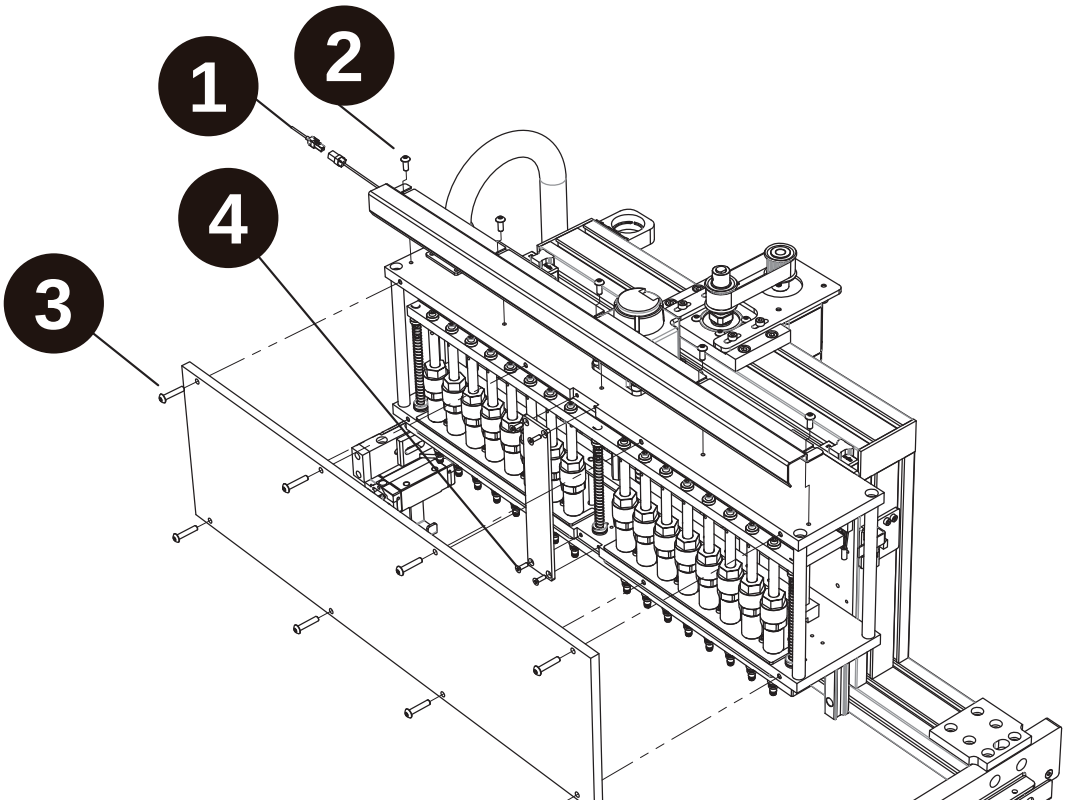

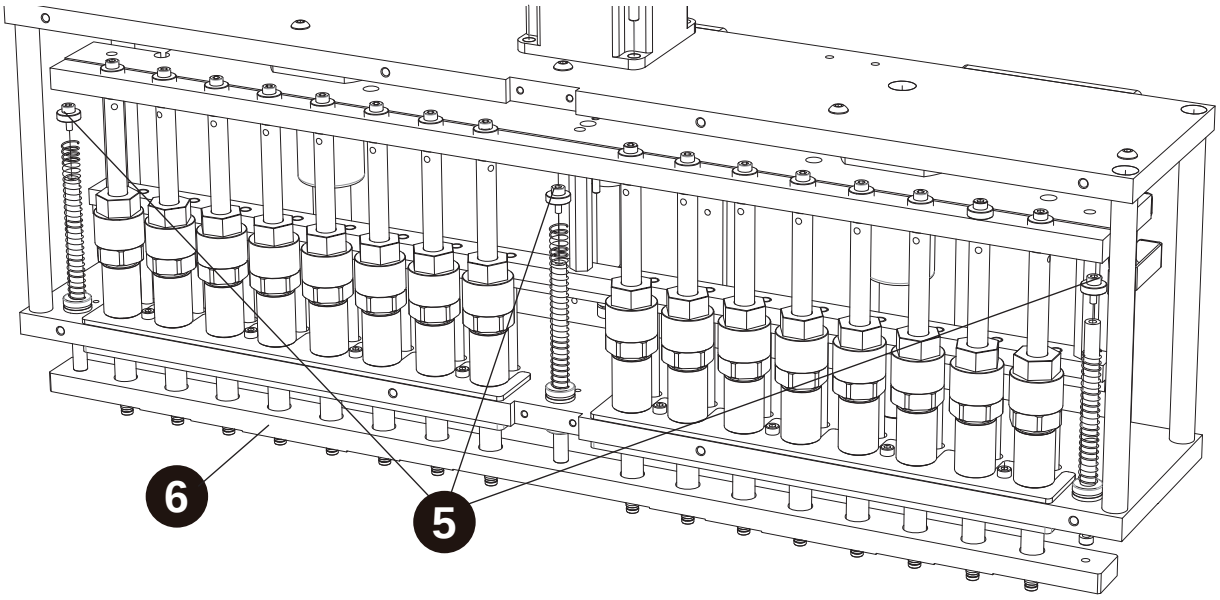

Replace the heater module

Open the front door and take out the waste box, cartridge rack and T-rack.

1. Screw off the four screws on the heating module (2 mm Hex wrench).
2. Pull out the temperature probe from the module.
3. Remove the connection wire to the heater.
4. Remove the protection switch wire to the heater.
5. Take out the heating module from the bottom.
6. Install a new heating module and lock back all the parts.

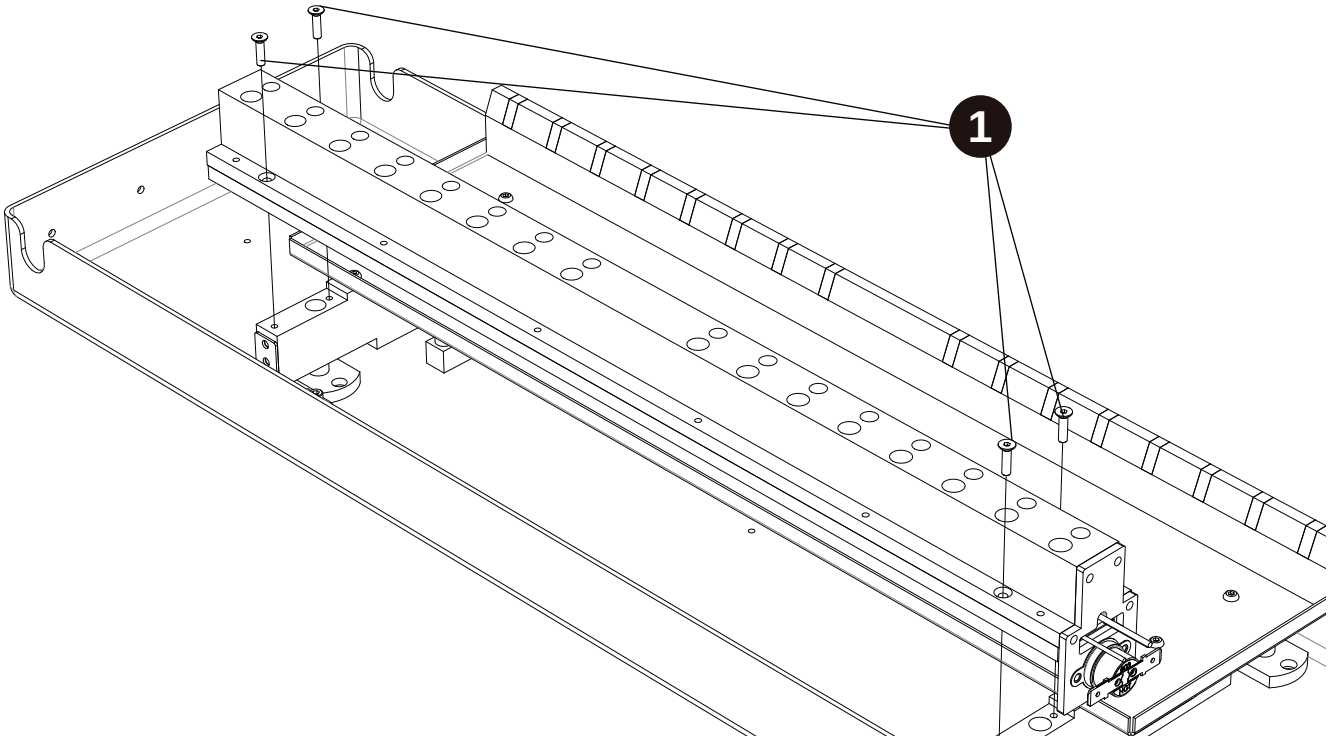

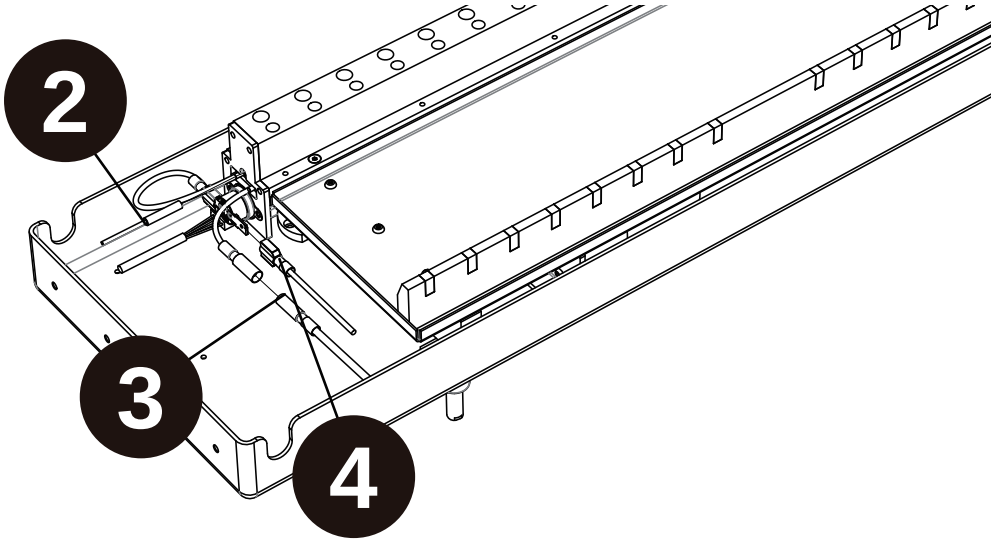

Replace the gas spring on the front door

1. Open the front door.
2. Screw off one screw and one nut (4mm Hex wrench) (Note that you can only replace one gas spring at a time).
3. Screw off the screw on the front door (3mm Hex wrench).
4. Replace the gas spring and screw up the screws.

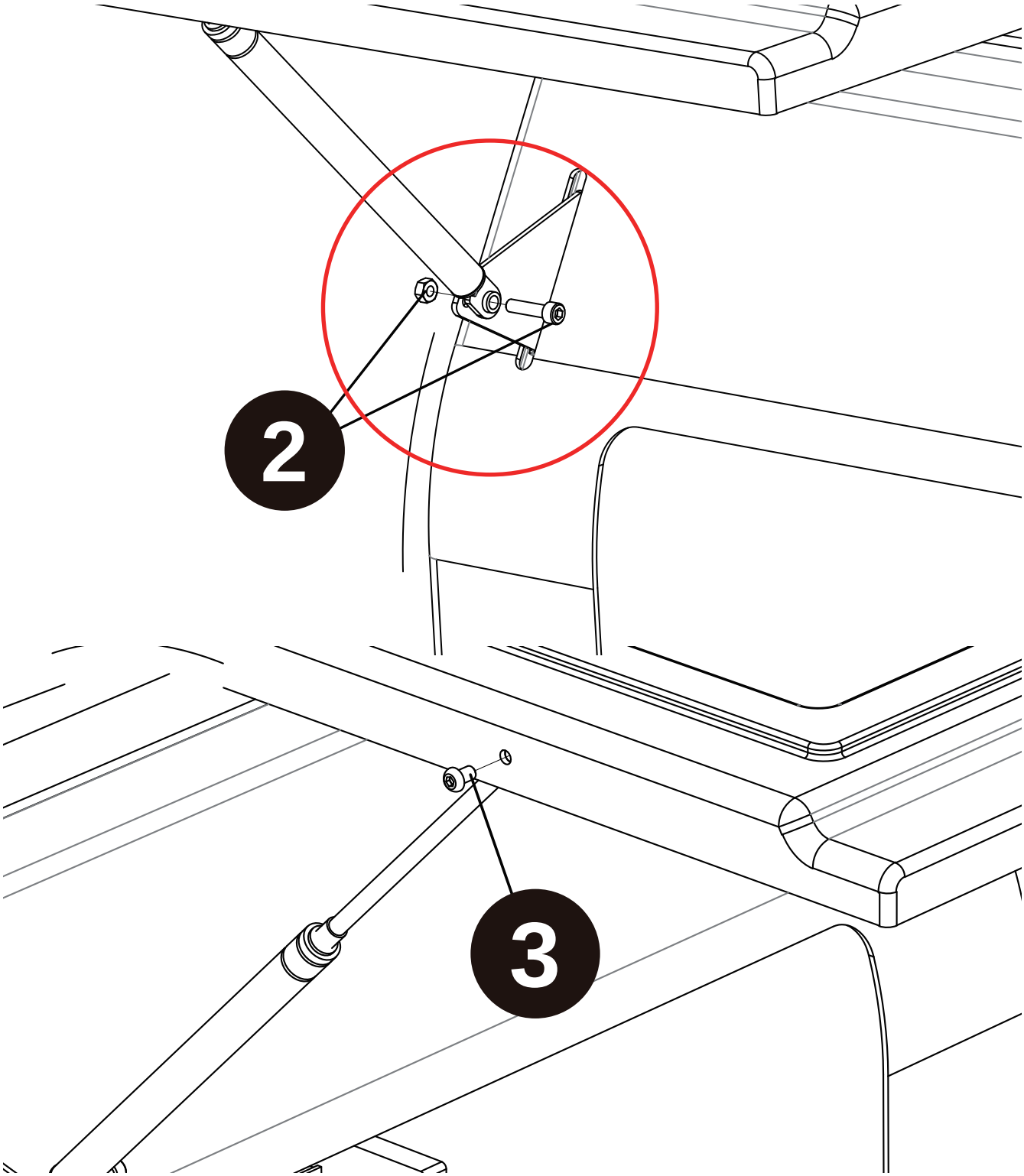

Replace Door Sensor

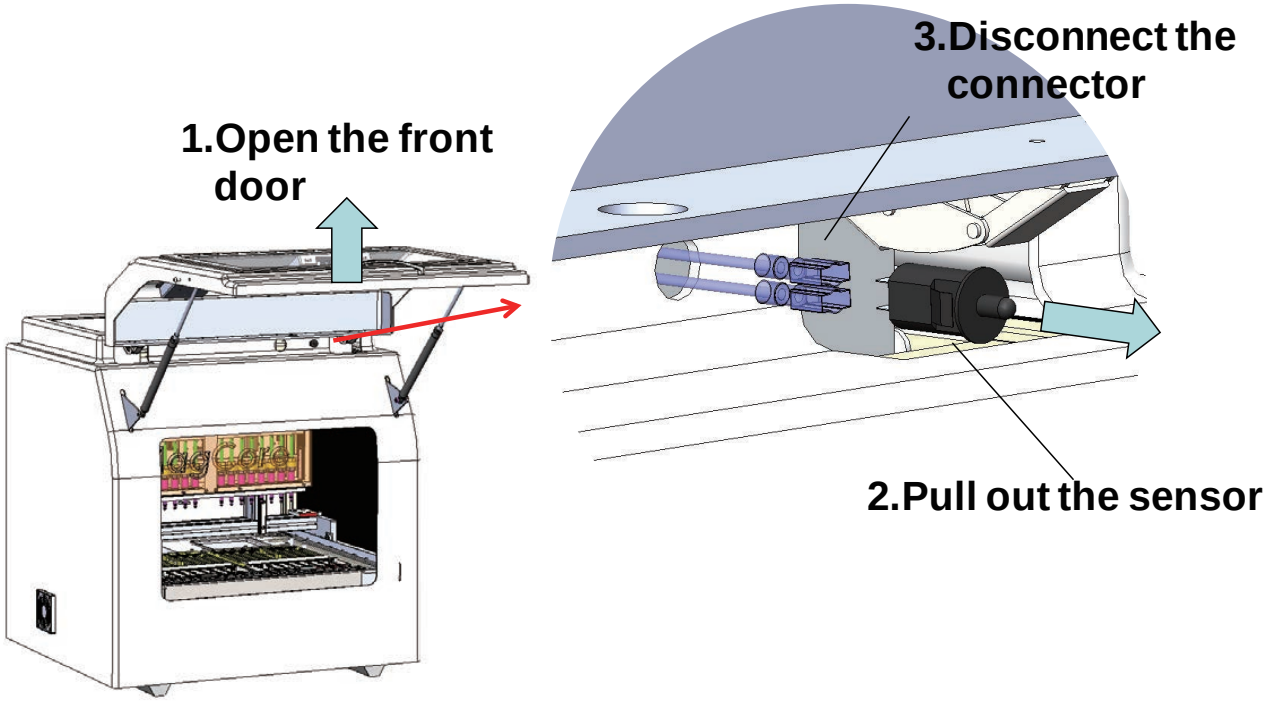

Replace the M-axis sensors

Open the front door and take out the waste box, cartridge rack and T-rack.

1. Screw off the two screws on each sensor.(2.5mm Hex wrench).
2. Remove the wires connected to the sensors.
3. Replace new sensors and screw up the screws.

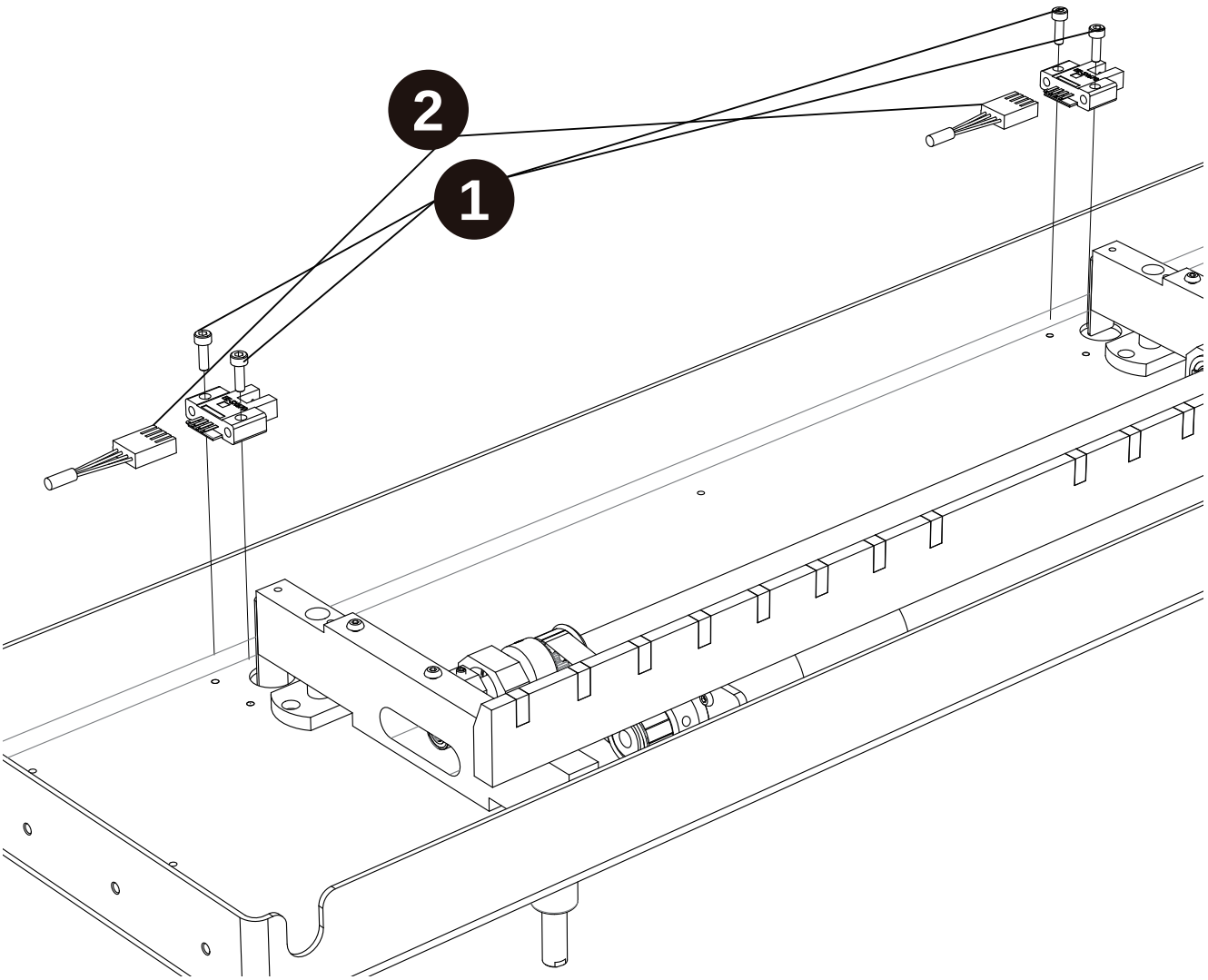

Replace the sensors of C, V, X and Y axes

1. Remove the wires connected to the sensors.
2. Screw off the two screws on each sensor(2.5mm Hex wrench).
3. Replace the sensors and lock back all the parts.

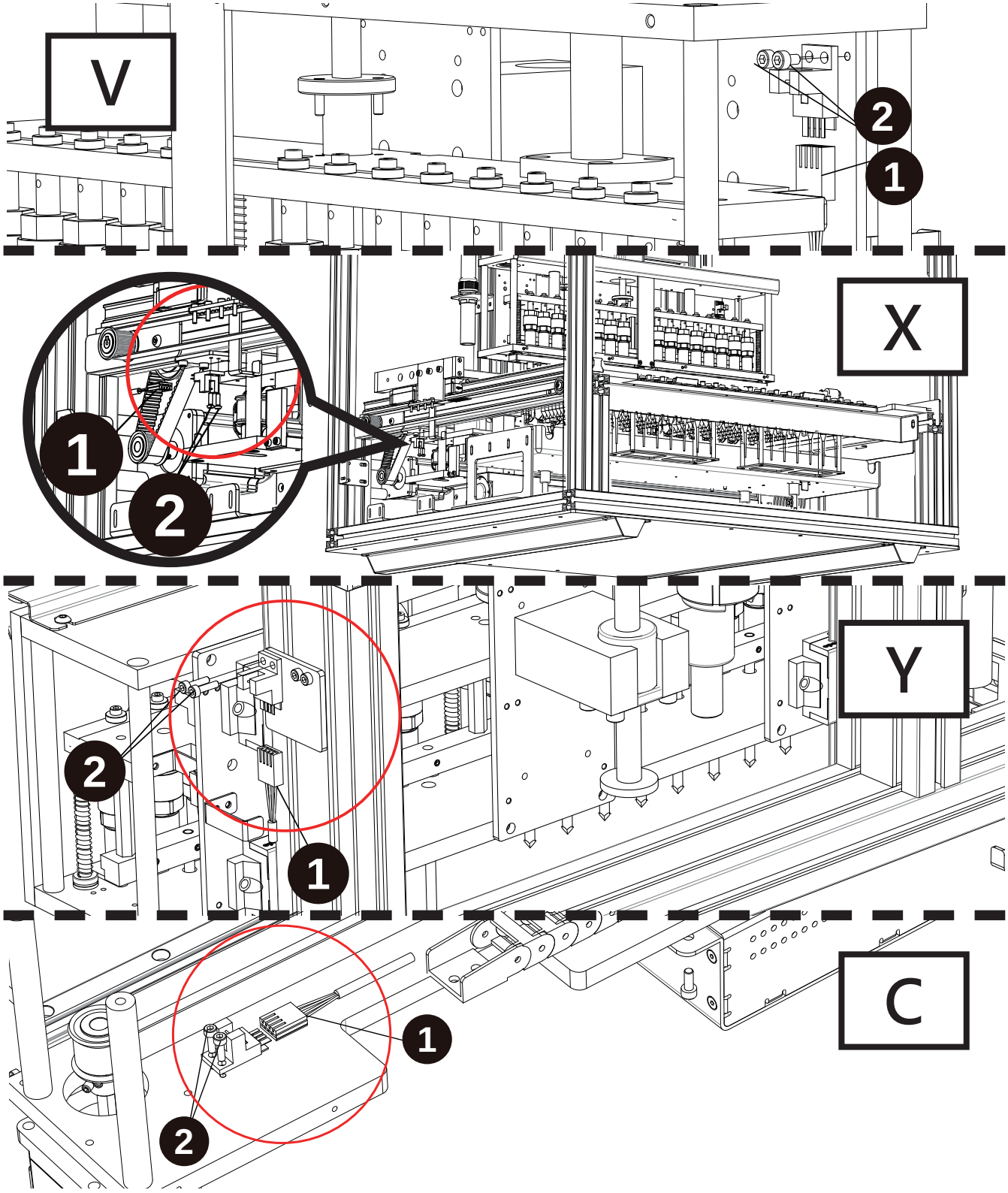

Replace Cooling Fans

1. **Loosen four screws of back service lid**

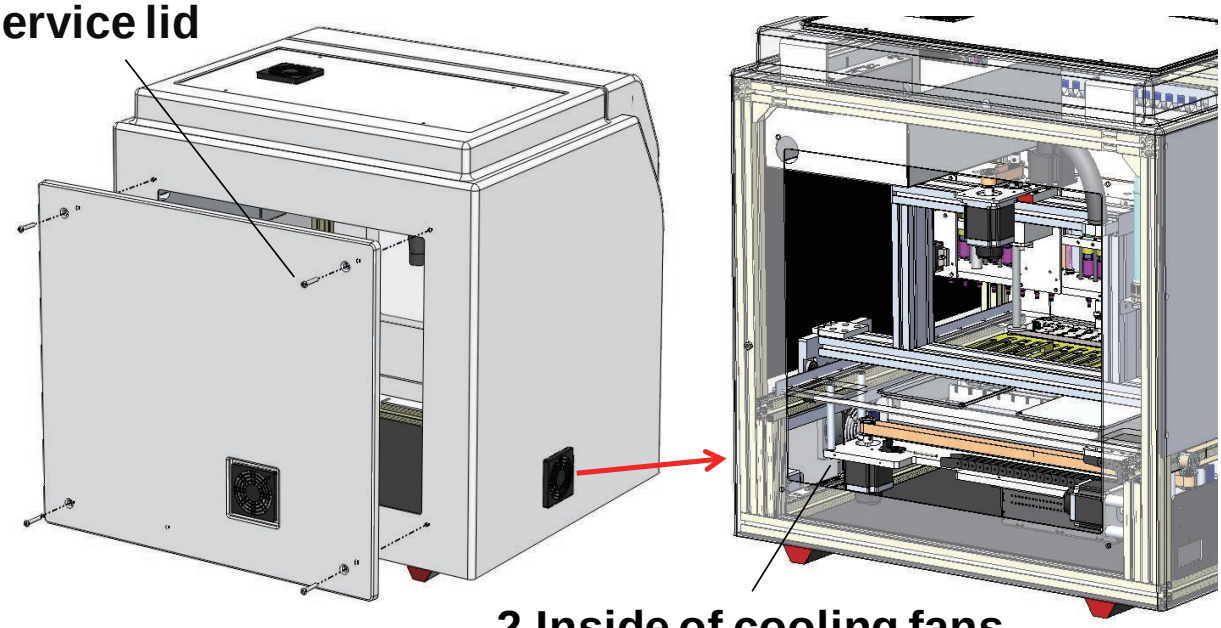

2.Inside of cooling fans

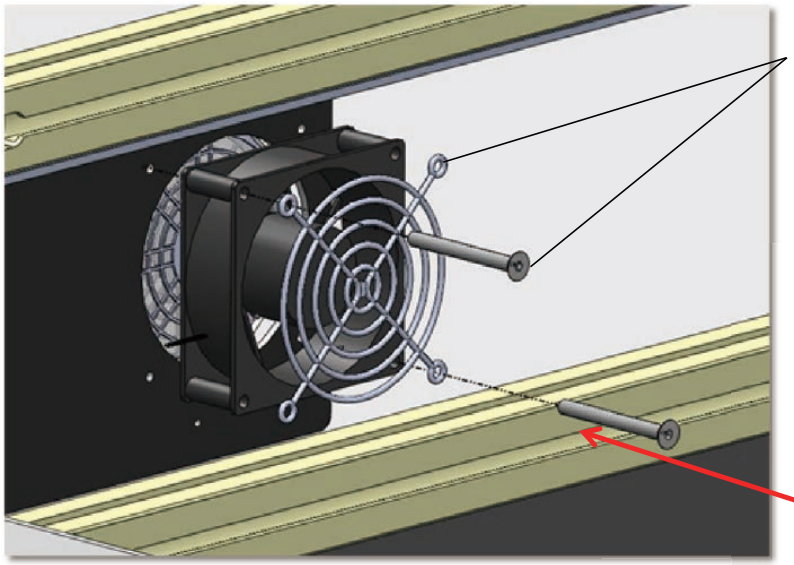

3. Loosen two screws and remove protecting net

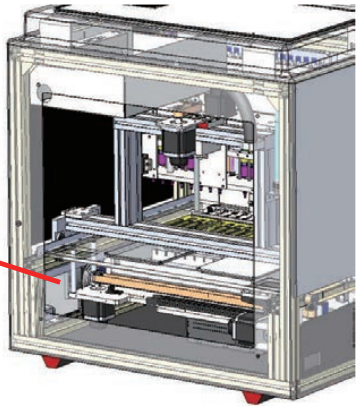

Replace the X-axis stepper motor

Open the back service lid.

1. Unplug the connector to the X-axis motor.
2. Screw off the two screws on the holder of the motor (5mm Hex wrench).
3. Screw off the two screws on the timing gear (1.5mm Hex wrench).
4. Screw off the four screws on the motor (3mm Hex wrench).
5. Replace the X-axis motor.
6. Install the new X-axis motor on the machine.

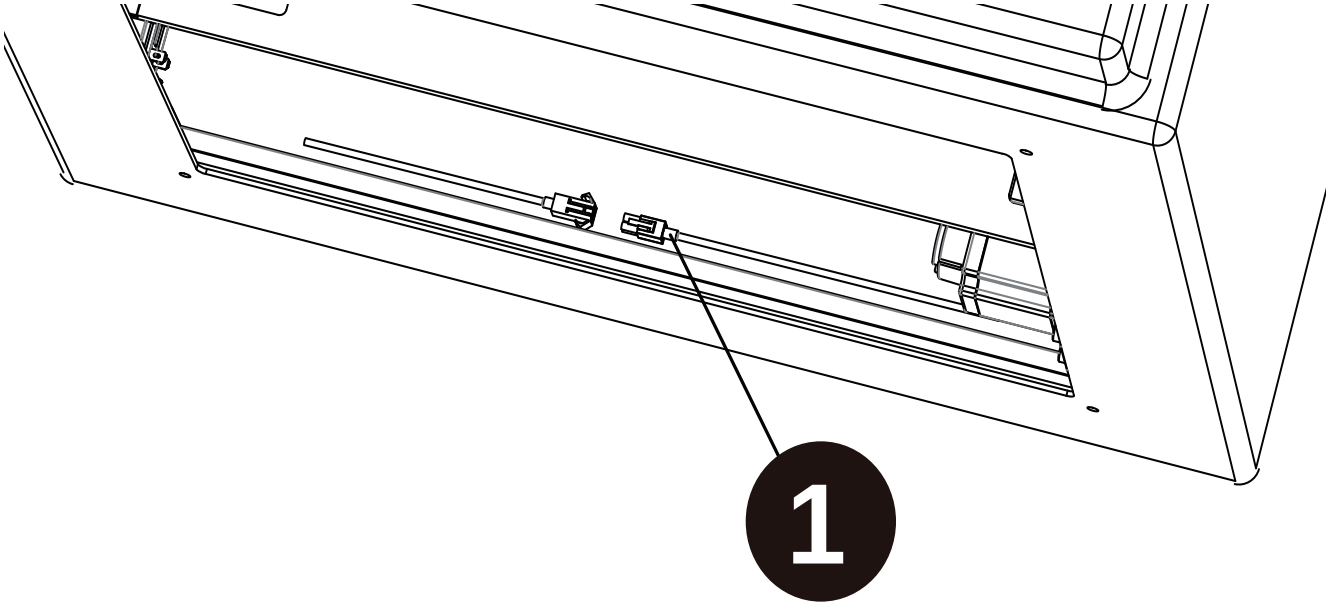

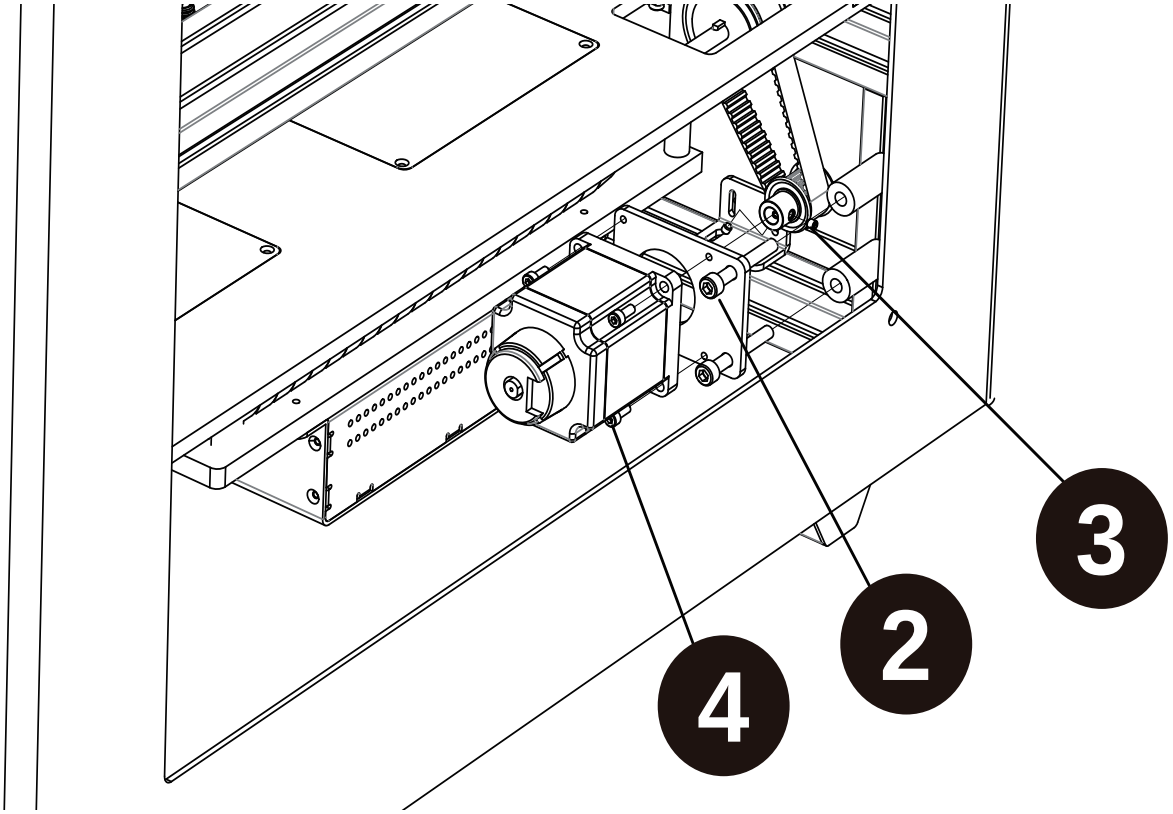

Replace the Y-axis motor

Open the back service lid.

1. Install the Y-axis fixing plate on the machine and screw up the two screws. (Phillips screwdrivers).
2. Unplug the connector of the Y-axis motor.
3. Screw off the four screws on the metal sheet of the Y-axis motor (3mm Hex wrench).
4. Screw off the two set screws on the timing gear (2 mm Hex wrench).
5. Screw off the four screws on the motor (3mm Hex wrench).
6. Replace the Y-axis motor.
7. Install the new Y-axis motor on the machine.
8. Note that the belt should have always some tension when reinstalling it.
9. Disassemble the Y-axis fixing plate and screw off the two screws (Phillips screwdriver).

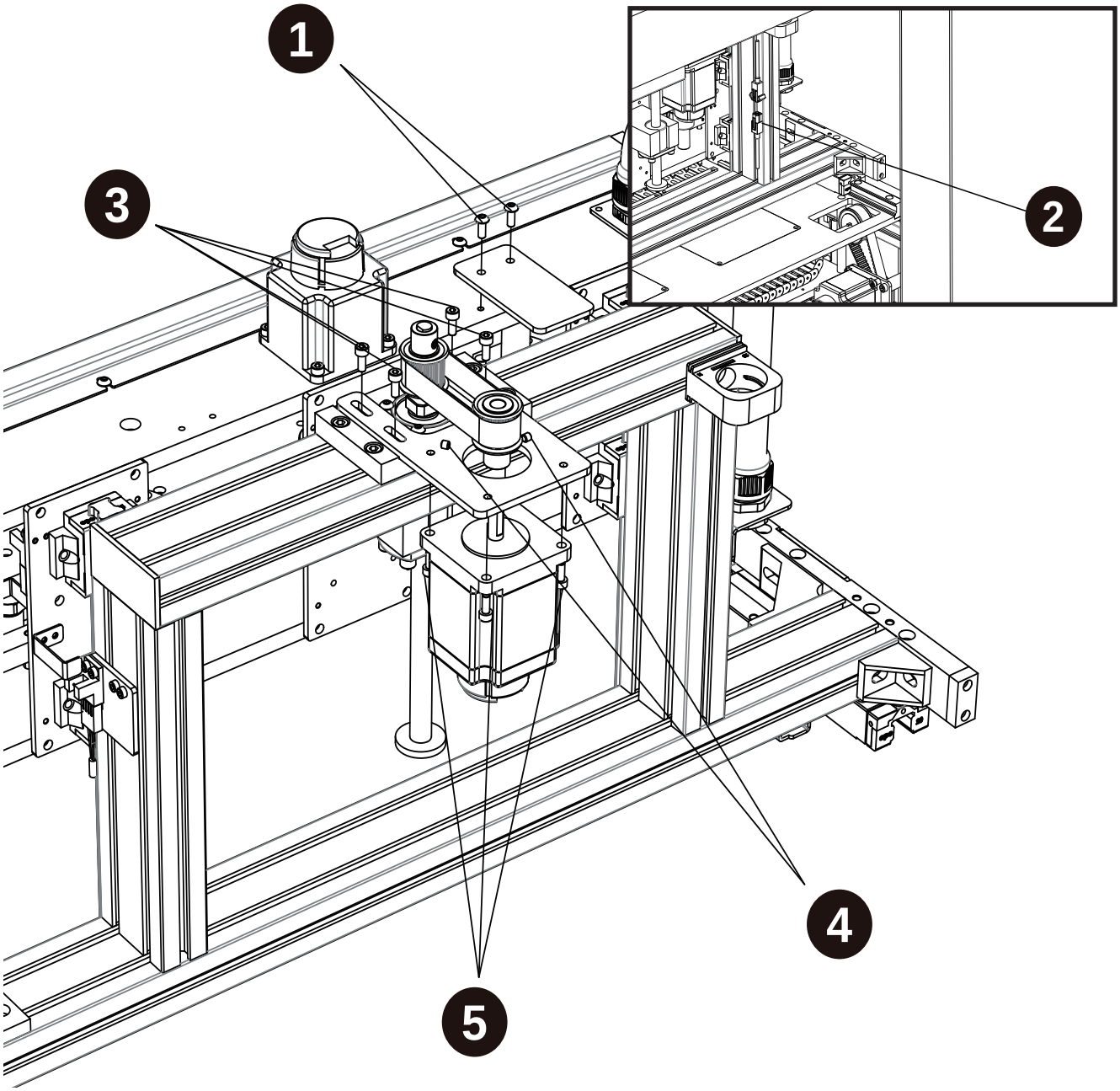

Replace the Y-axis belt

Open the back service lid.

1. Install the Y-axis fixing plate on the machine and screw up the two screws (Phillips screwdriver).
2. Screw off the four screws of the metal sheet of the Y-axis motor (3mm Hex wrench).
3. Push the metal sheet of the motor forward.
4. Replace the timing belt.
5. Install the Y-axis motor on the machine.
6. Note that the belt should be a little tight when reinstalling it.
7. Disassemble the Y-axis fixing plate and screw off the two screws (Phillips screwdriver).

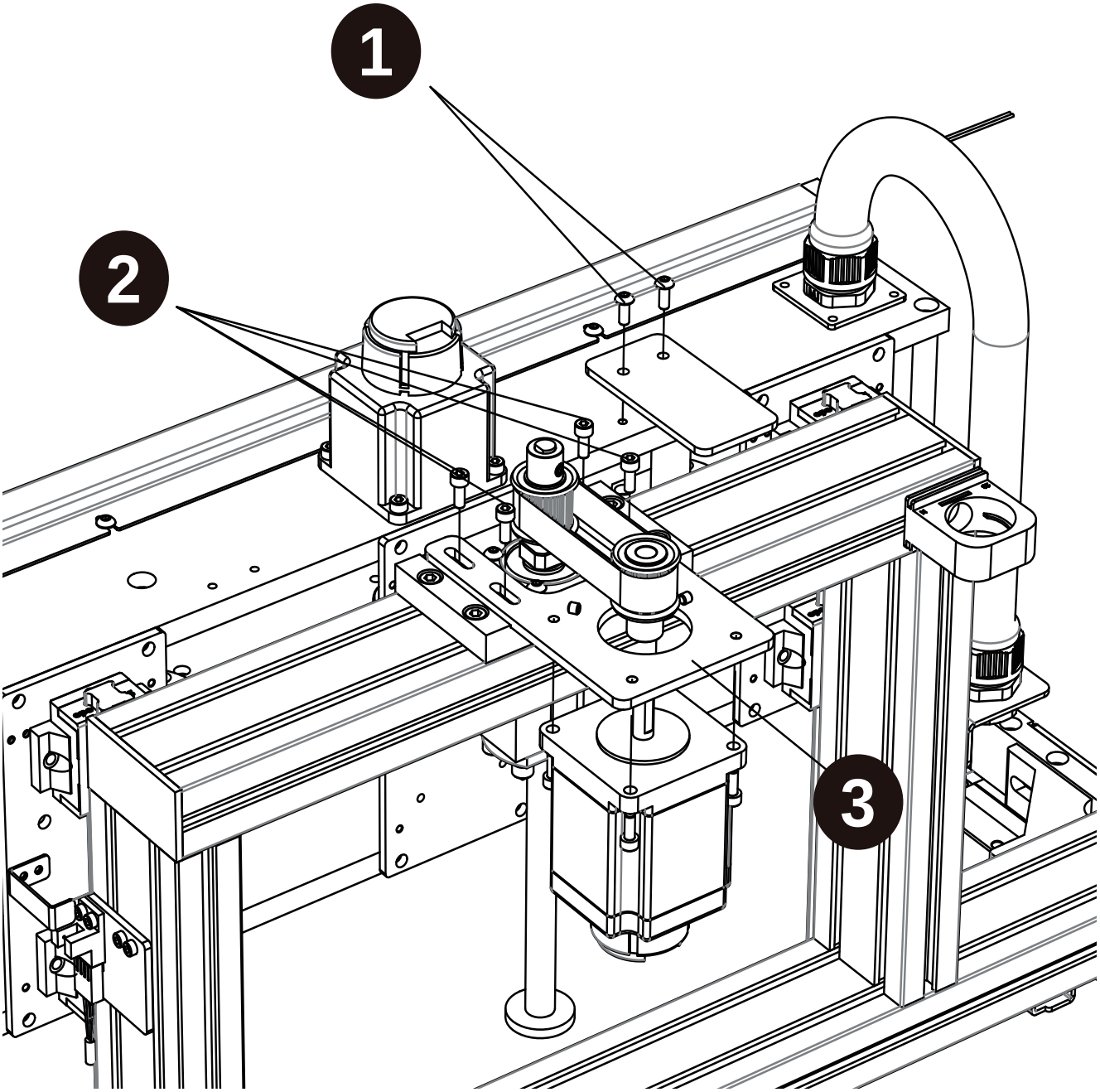

Replace the V-axis motor

Open the front door.

1. Unplug the wire connector of the LED.
2. Loosen the three screws on the top of piston module (2.5mm Hex wrench), and take off the LED module.
3. Screw off the eight screws on the acrylic nameplate at the front side (2.5mm Hex wrench).
4. Screw off the four screws on the reinforced metal sheet (1.5mm Hex wrench).

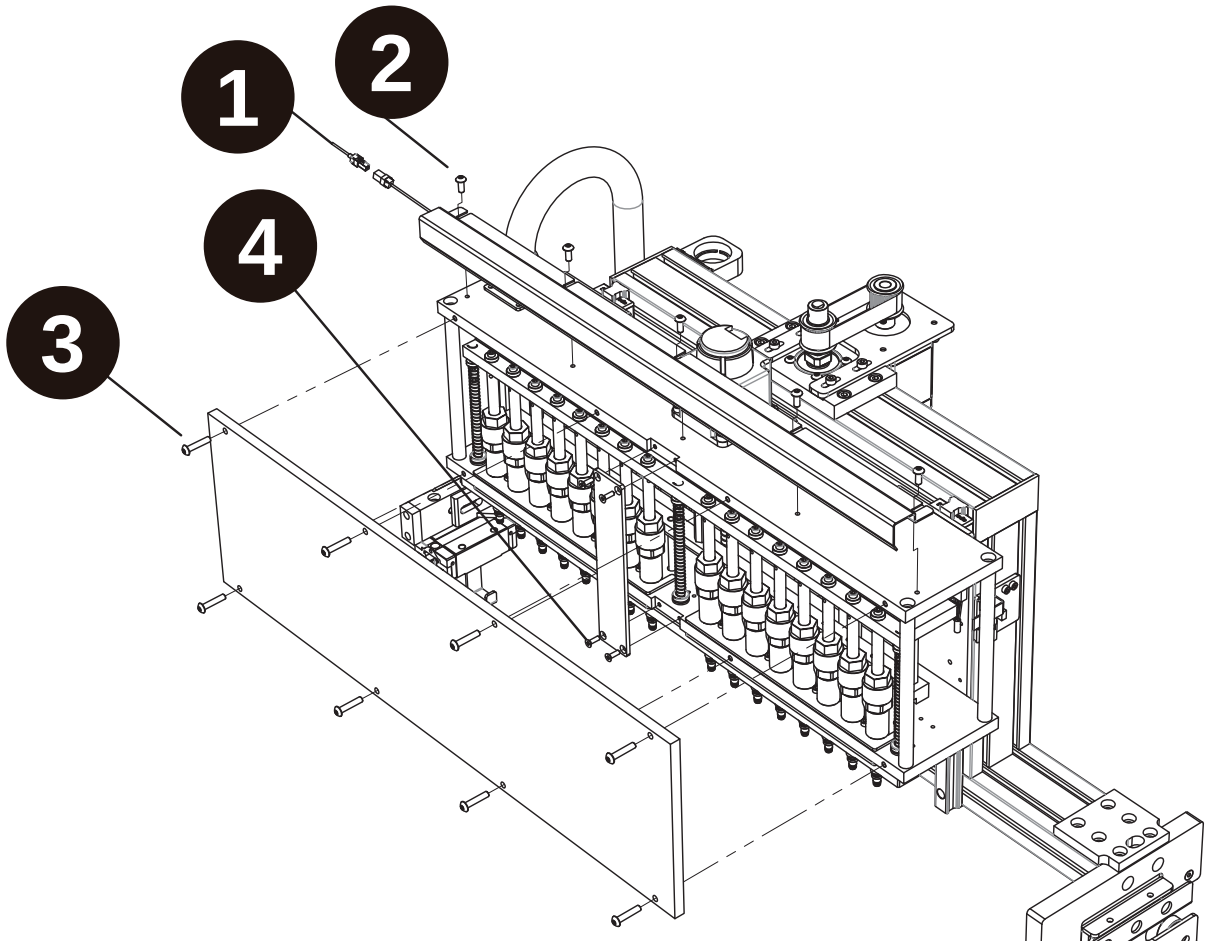

5. Unplug the connection wire to the V-axis motor.
6. Screw off the four screws on the motor (3mm Hex wrench).
7. Screw off the three screws on the axle sleeve (2.5mm Hex wrench).
8. Replace a new V-axis motor.
9. Install the new V-axis motor on the machine.

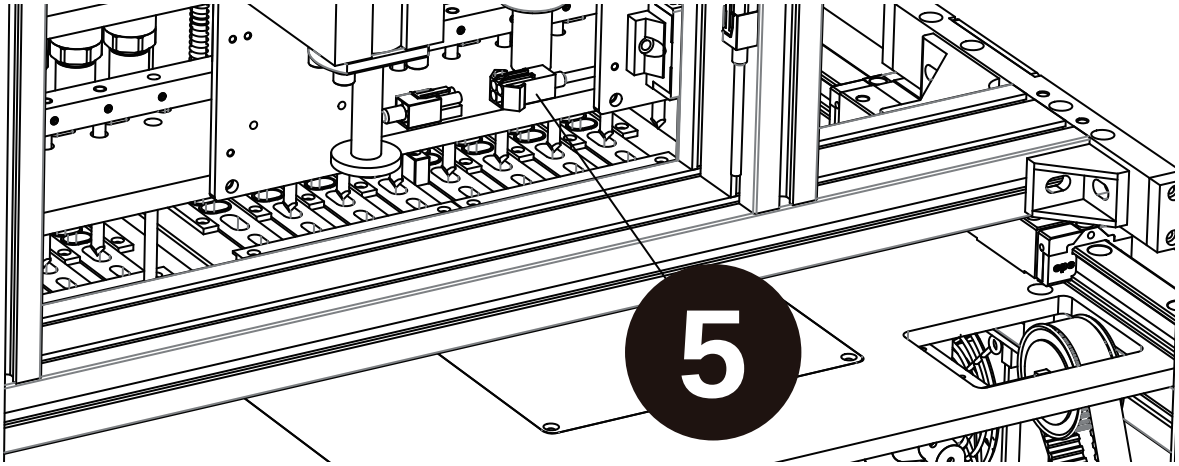

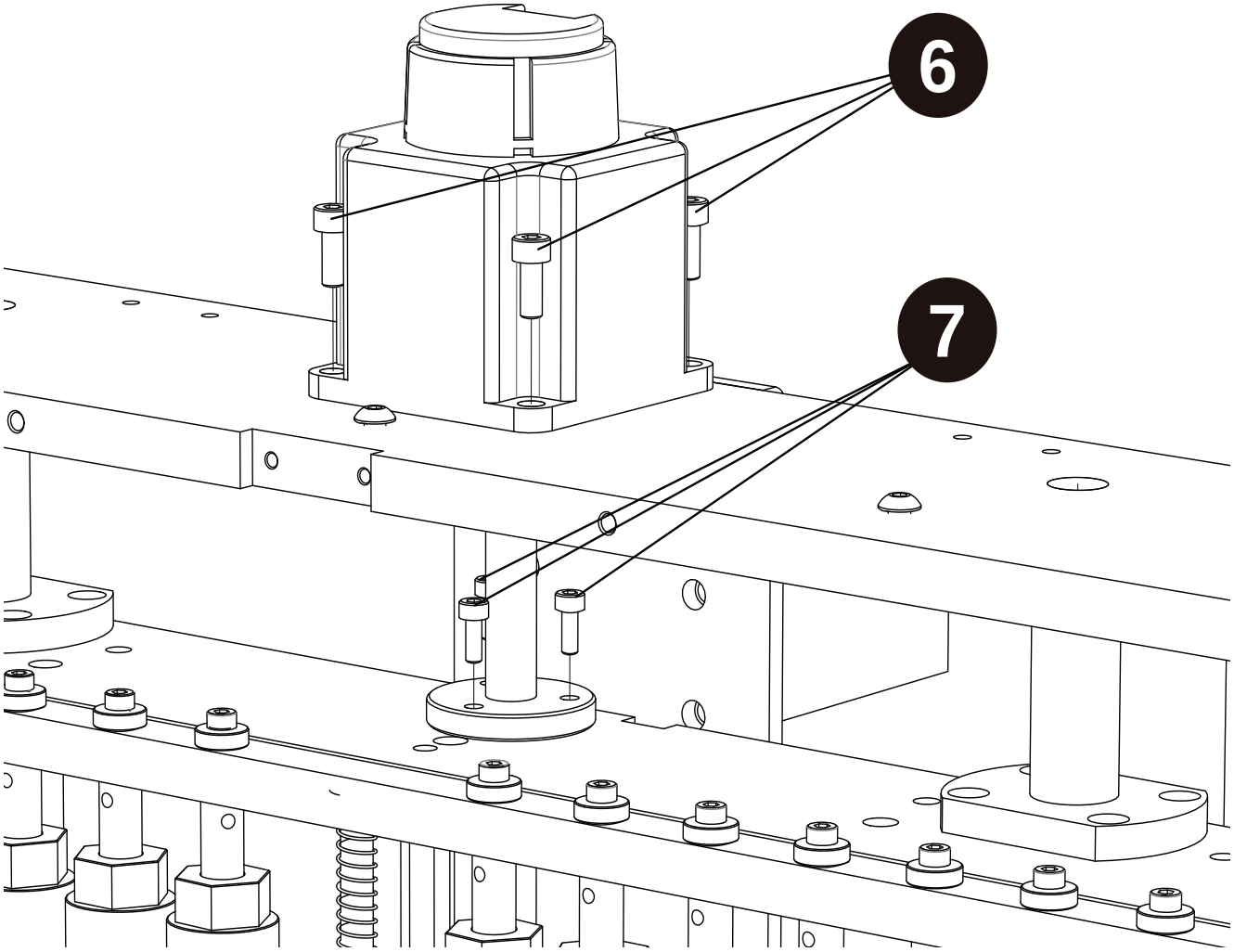

Replace the C-axis motor

Open the back service lid.

1. Unplug the connector wires to the C-axis motor.
2. Screw off the four screws on the optic lamp driver (3mm Hex wrench).
3. Screw off the two screws on the driven timing gear (4mm Hex wrench).
4. Screw off the four screws on the motor (3mm Hex wrench).
5. Screw off the two set screws on the timing gear (1.5mm Hex wrench).
6. Replace the C-axis motor.
7. Install the new C-axis motor on the machine.
8. Note that the belt should be a little tight after installation.

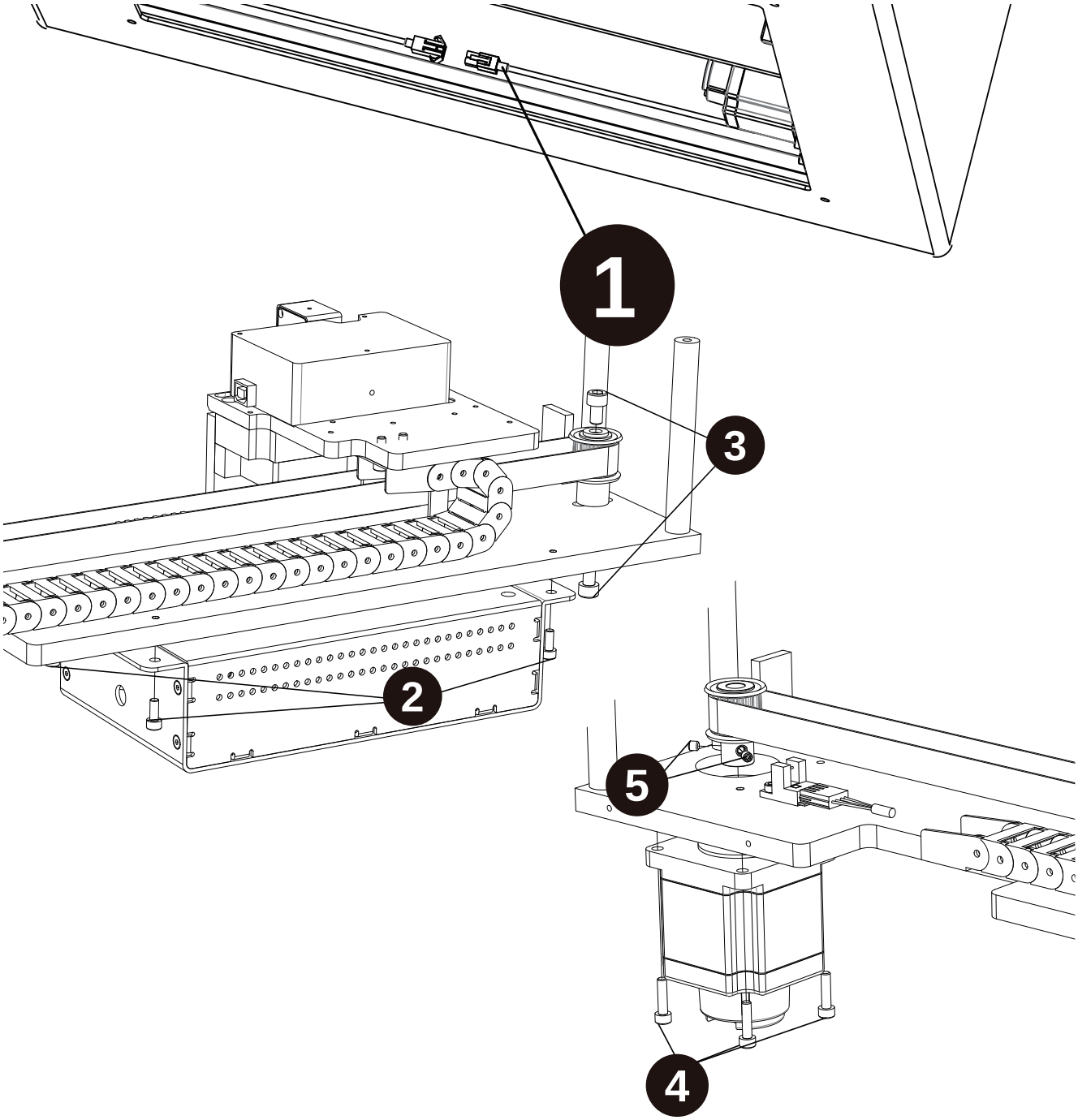

Replace the C-axis timing belt

Open the back service lid.

1. Unplug the connector to the optic lamp driver.
2. Screw off the four screws on the optic lamp driver (3mm Hex wrench).
3. Screw off the two screws on the driven timing gear (4mm, 5mm Hex wrench).
4. Screw off the four screws on the pressing metal sheet (3mm Hex wrench).
5. Replace the C-axis timing belt.
6. Note that the belt should be a little tight.
7. Reinstall the above components back in order.

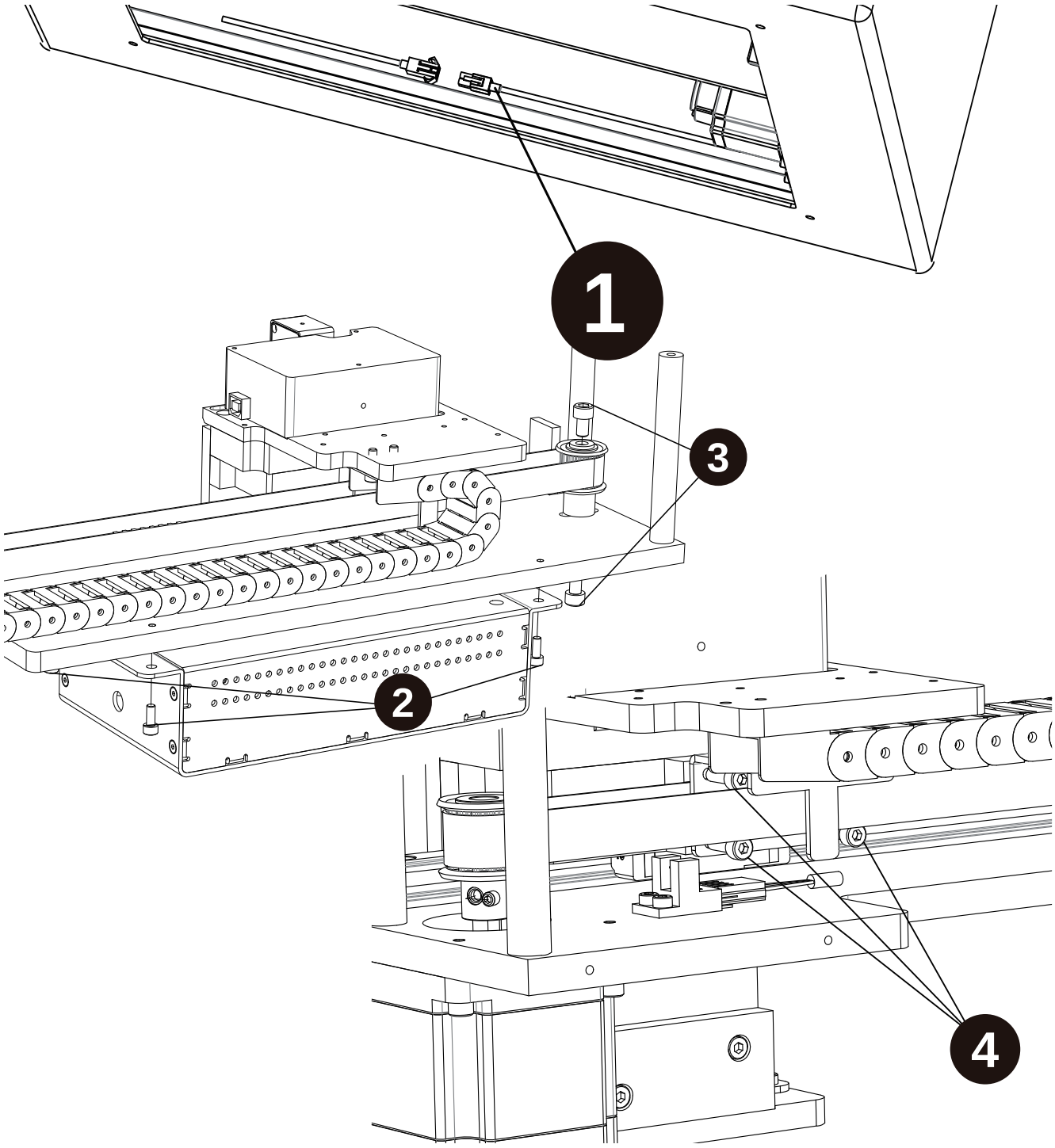

Replace the lift motor of the base

Open the front door and take out the waste box, cartridge rack and T-rack.

1. Unplug the power connector to the lift motor.
2. Screw off the six screws on the liquid container above the heating module (2mm Hex wrench).
3. Screw off the two screws on the metal sheet of the motor (3mm Hex wrench).
4. Screw off the two screws on the timing gear (2.5mm Hex wrench).
5. Screw off the four fixation screws on the motor (2.5mm Hex wrench).
6. Replace a new lift motor.
7. Install the new lift motor on the machine.
8. Note that the belt should be a little tight after installation.

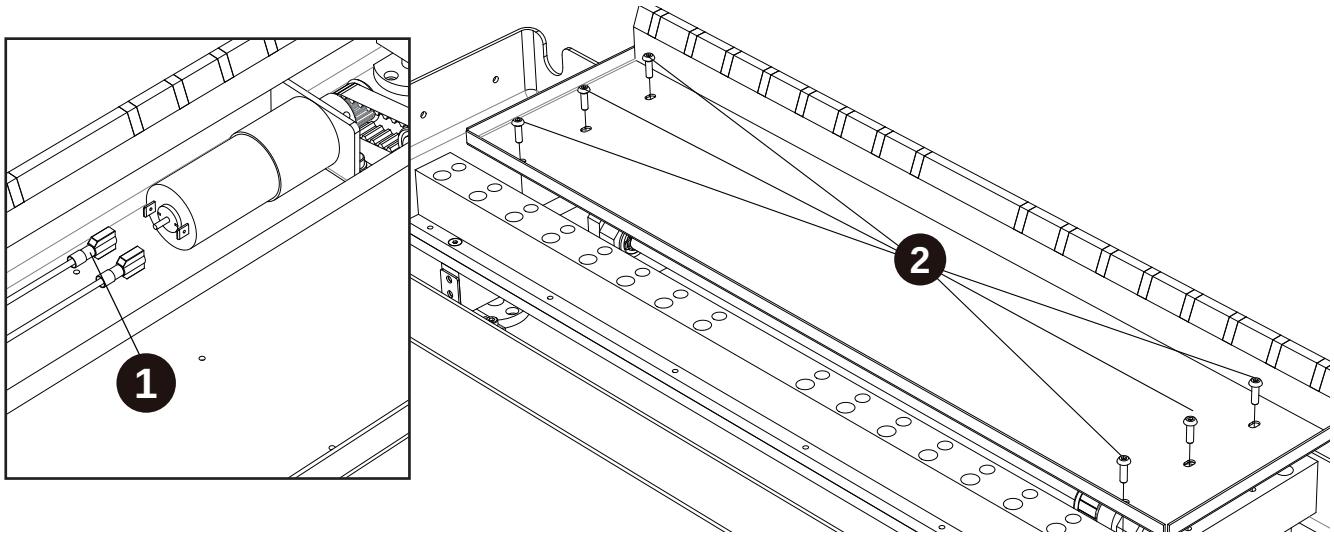

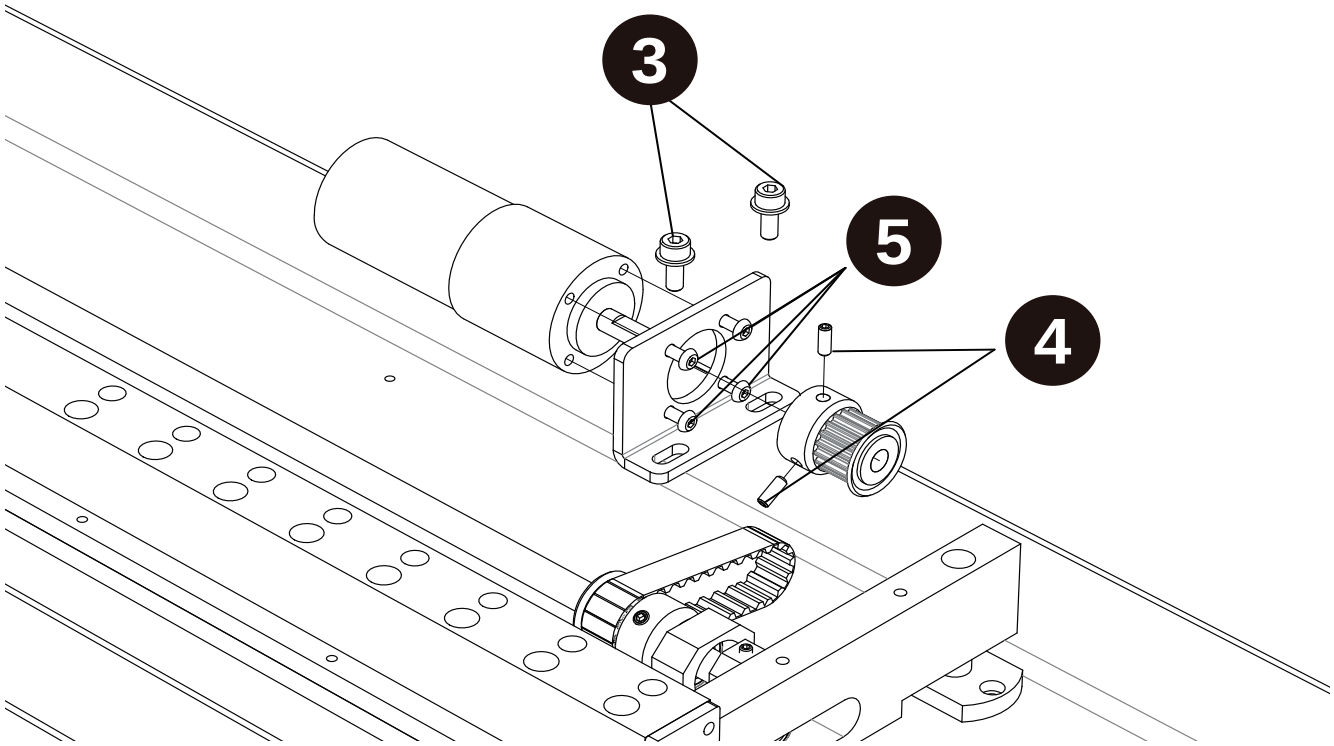

Replace the timing belt of the lift motor of the base

Open the front cover and take out the waste box, cartridge rack and T-rack.

1. Unplug the power connector to the lift motor.
2. Screw off the six screws on the liquid container above the heating module (2mm Hex wrench).
3. Screw off the two screws on the reinforced metal sheet of the motor (3mm Hex wrench).
4. Screw off the two screws on the bearings at the lateral grooves (4mm Hex wrench).
5. Screw off the four fixation screws on the fixation bases and move the drive module upward (3mm Hex wrench).
6. Replace the timing belt.
7. Note that the belt should be a little tight.
8. Install the lift motor, timing belt and timing gear on the machine.

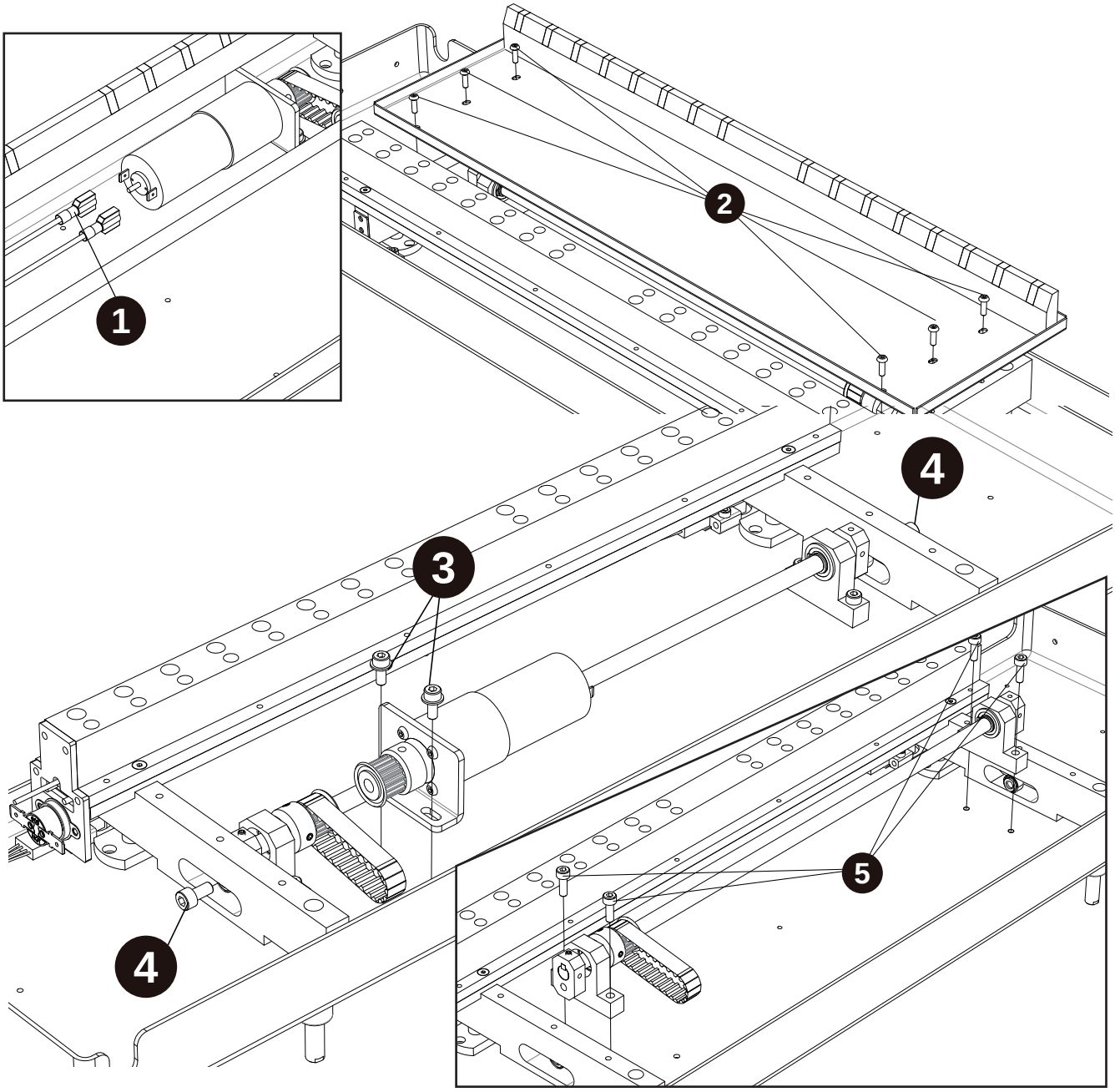

Replace PCB

1. Loosen four screws of top service lid

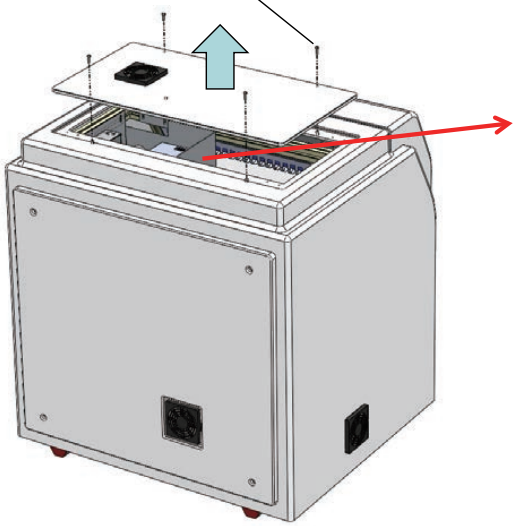

Power Switch

PLC

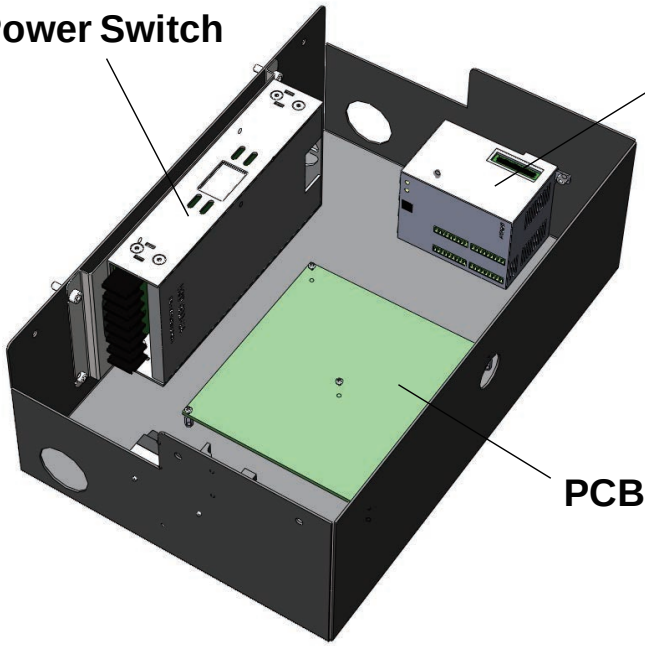

PCB

3. Loosen five screws of PCB

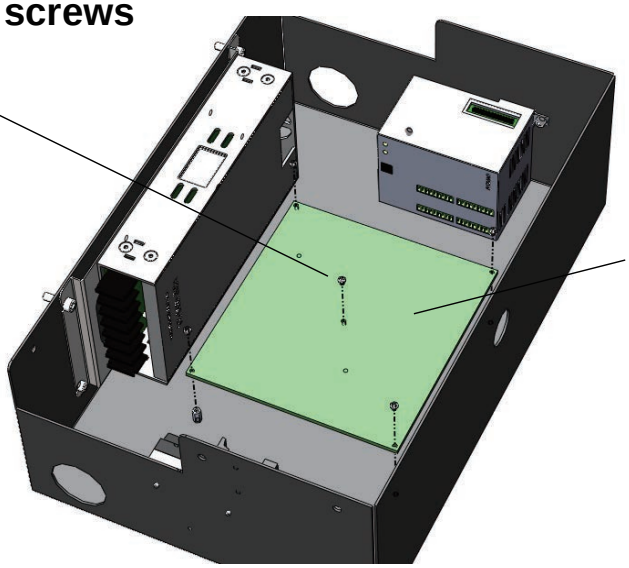

2. Disconnect the connector of PCB

Replace PLC

1. Loosen four screws on top service lid

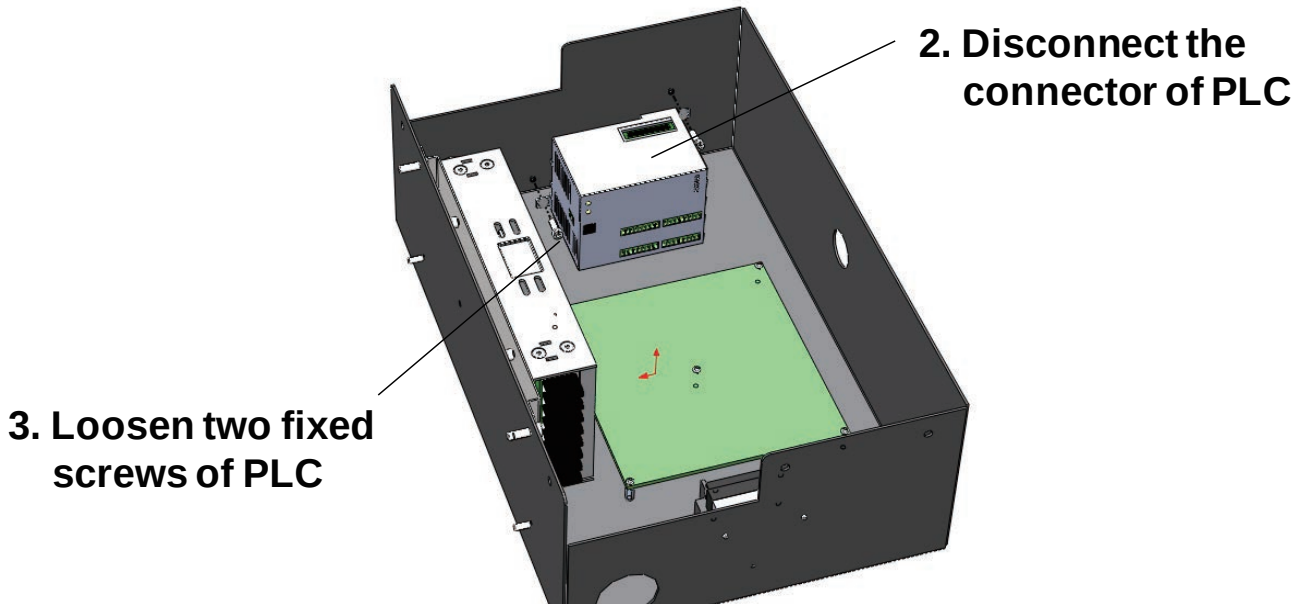

Replace Power Supply

1. Loosen four screws on top service lid

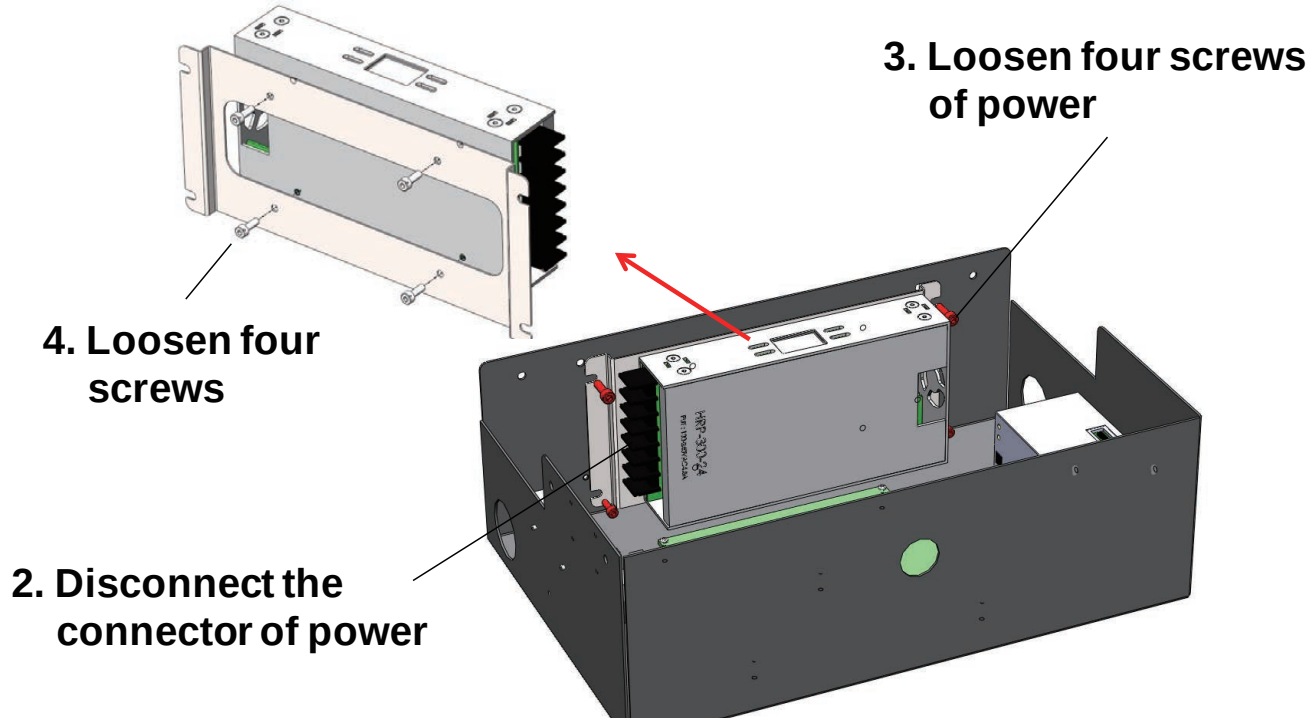

Replace Touch Panel

1. Open the front door

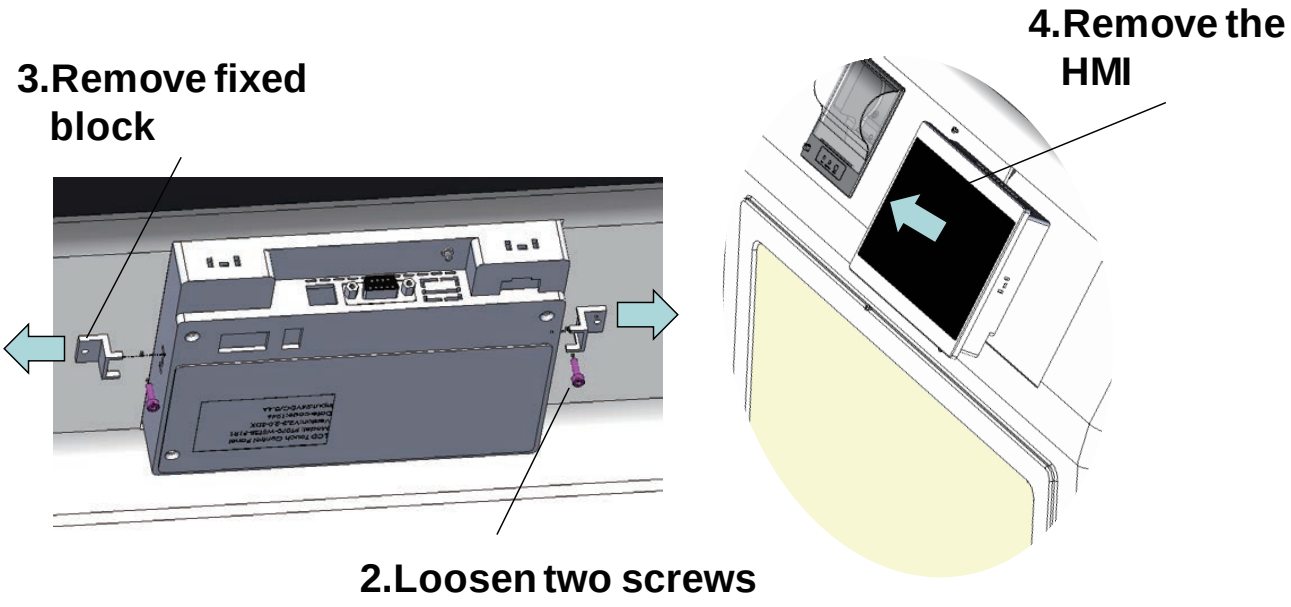

Replace Printer

1. Open the front door

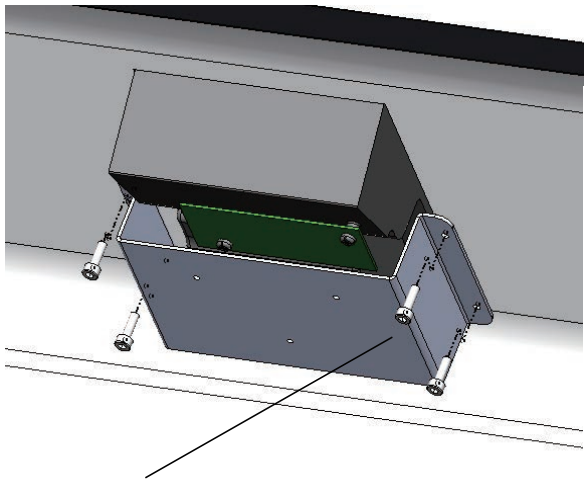

2.Loosen four screws

3.Close the front door

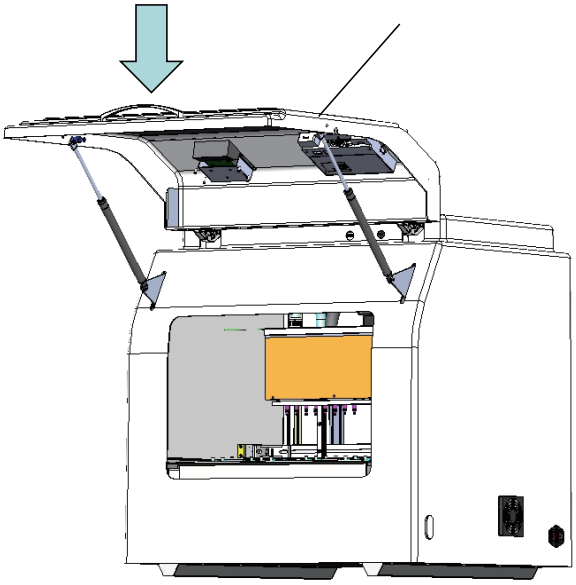

4.Open the cover

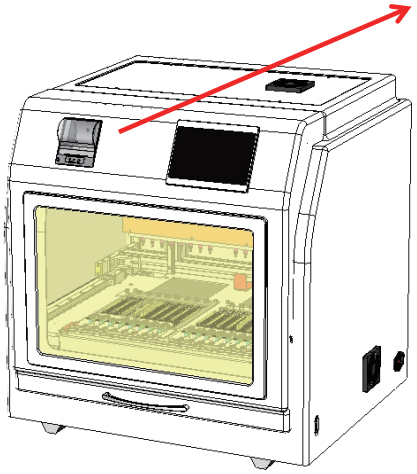

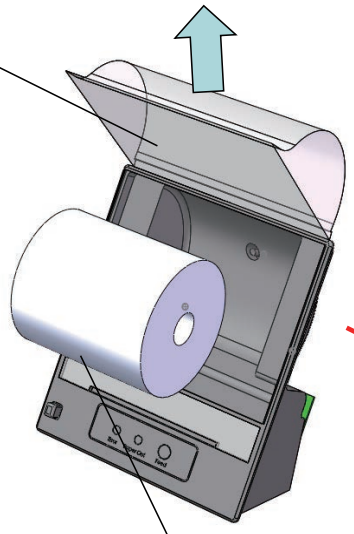

5. Take off the paper roll

6. Loosen three screws

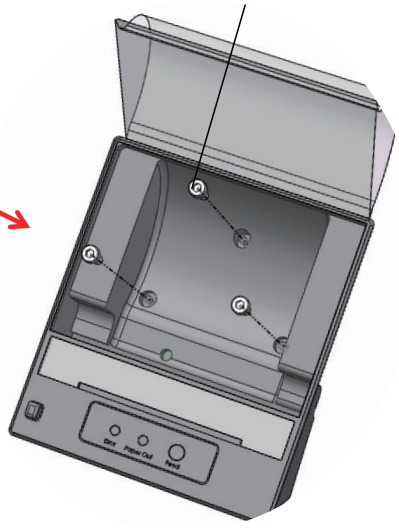



Electrical control and engineering software

System

HMI
(Human–Machine Interface)



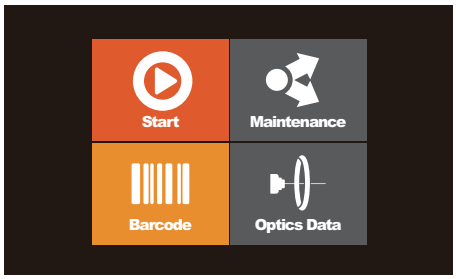

Select Program [Cartridge Code]

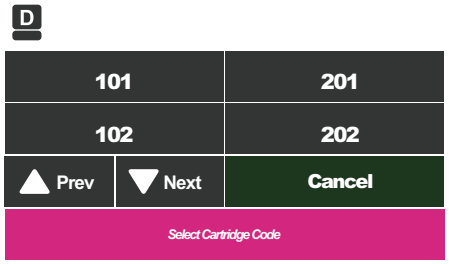

HMI send the program to PLC

PLC :
Programmable Logic Controller

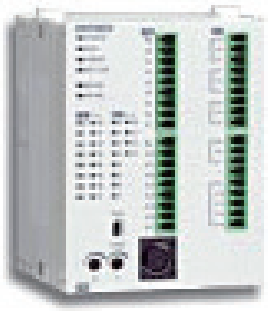

PLC runs programs, actions,

and send a signal through PCB to all parts

Main_Board

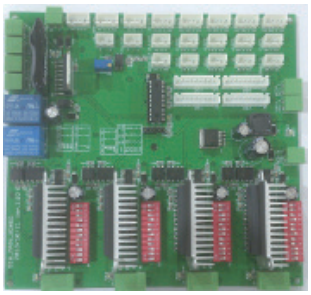



Optic Spectrometer
A_{260} / A_{280} / A_{320}

For Example:
HMI : Win8
Program : App
PLC : CPU

Parts

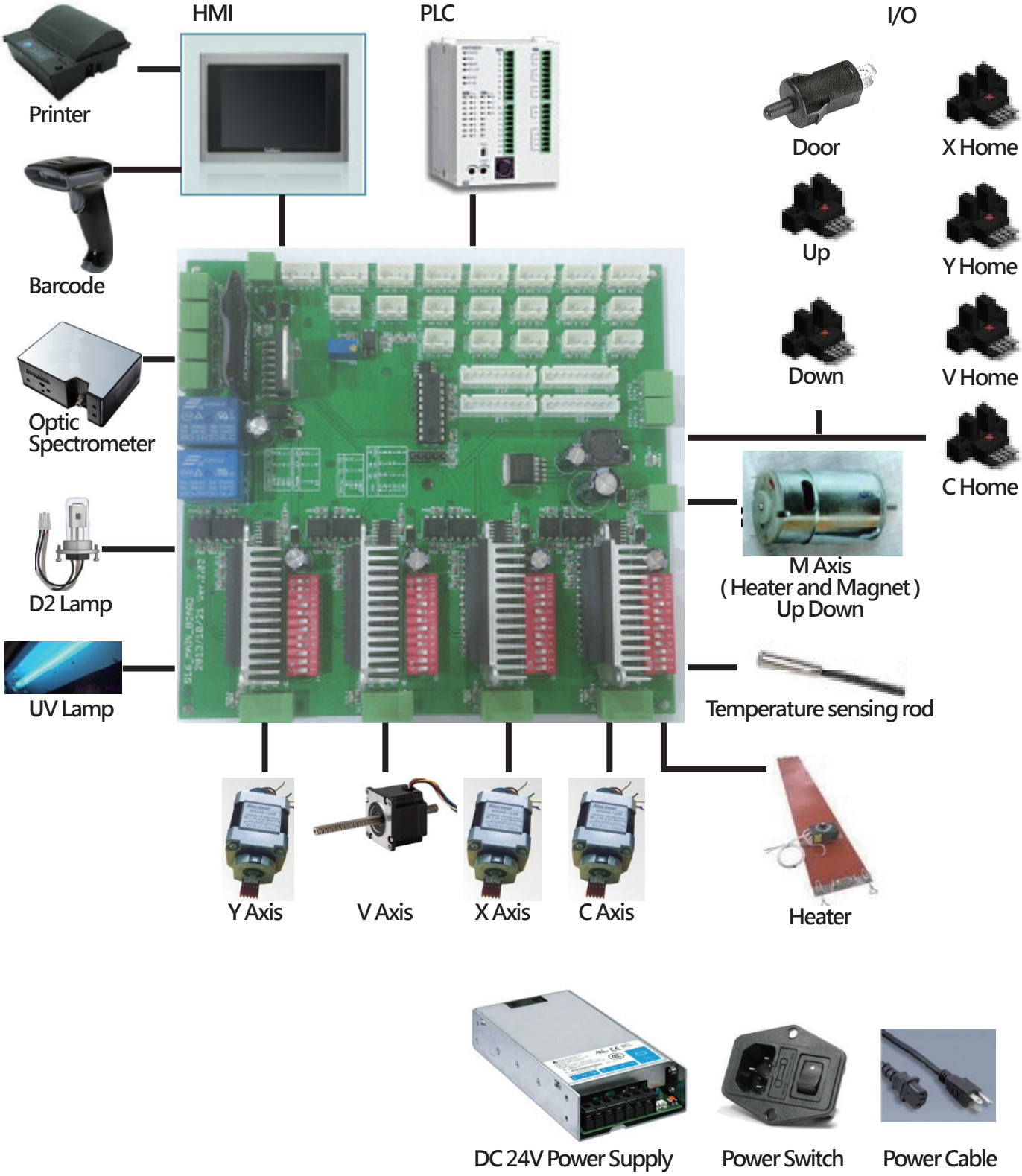
HMI
PLC
I/O
Printer
Barcode
Optic Spectrometer
D2 Lamp
UV Lamp
Door
X Home
Up
Y Home
Down
V Home
C Home
M Axis
(Heater and Magnet)
Up Down
Temperature sensing rod
Y Axis
V Axis
X Axis
C Axis
Heater
DC 24V Power Supply
Power Switch
Power Cable

Main board configuration

There are 2 types of PCBs in MagCore Super: Old type and New type.
Please check your PCB type and refer to the corresponding configuration.

Old Type

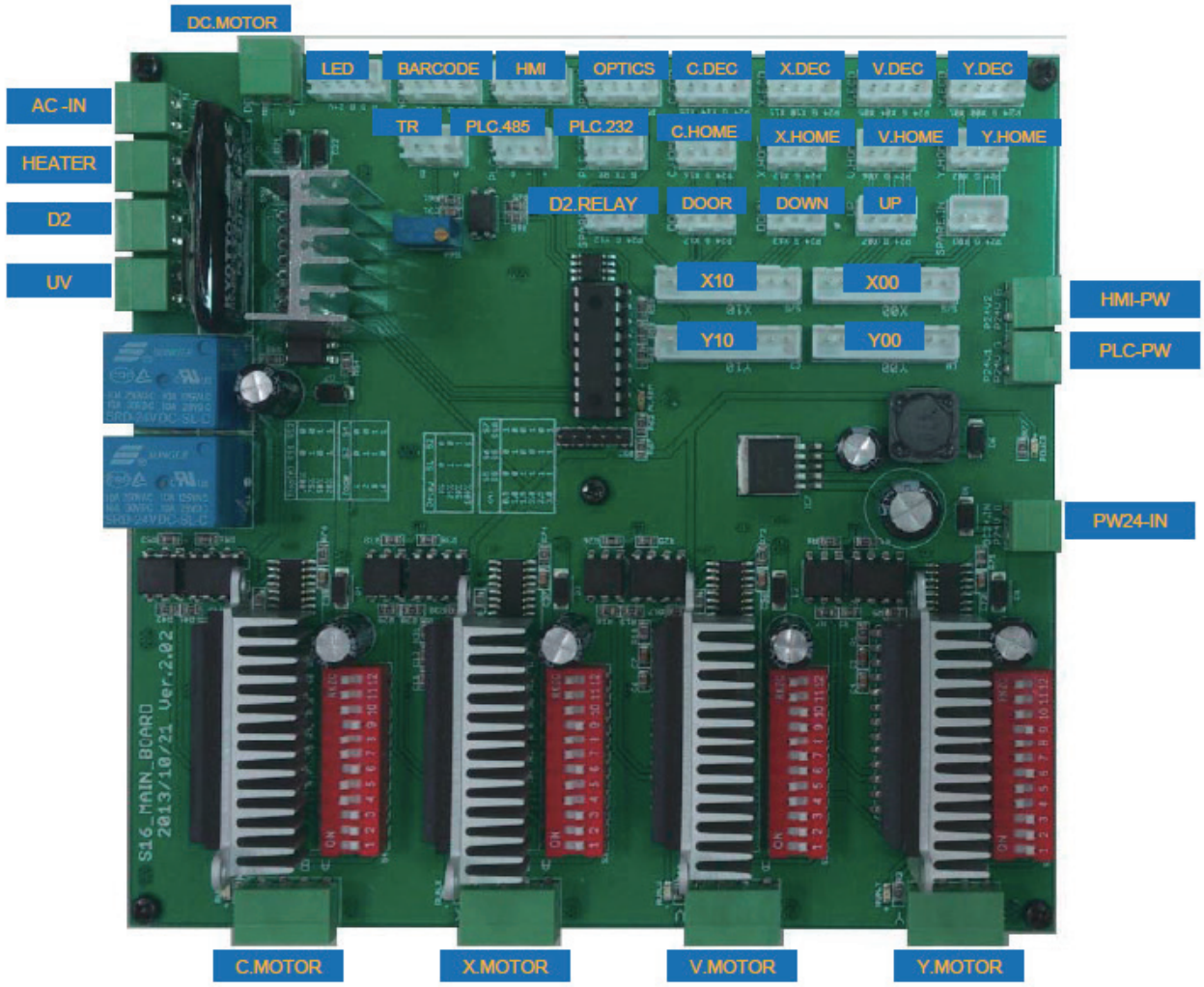

New Type

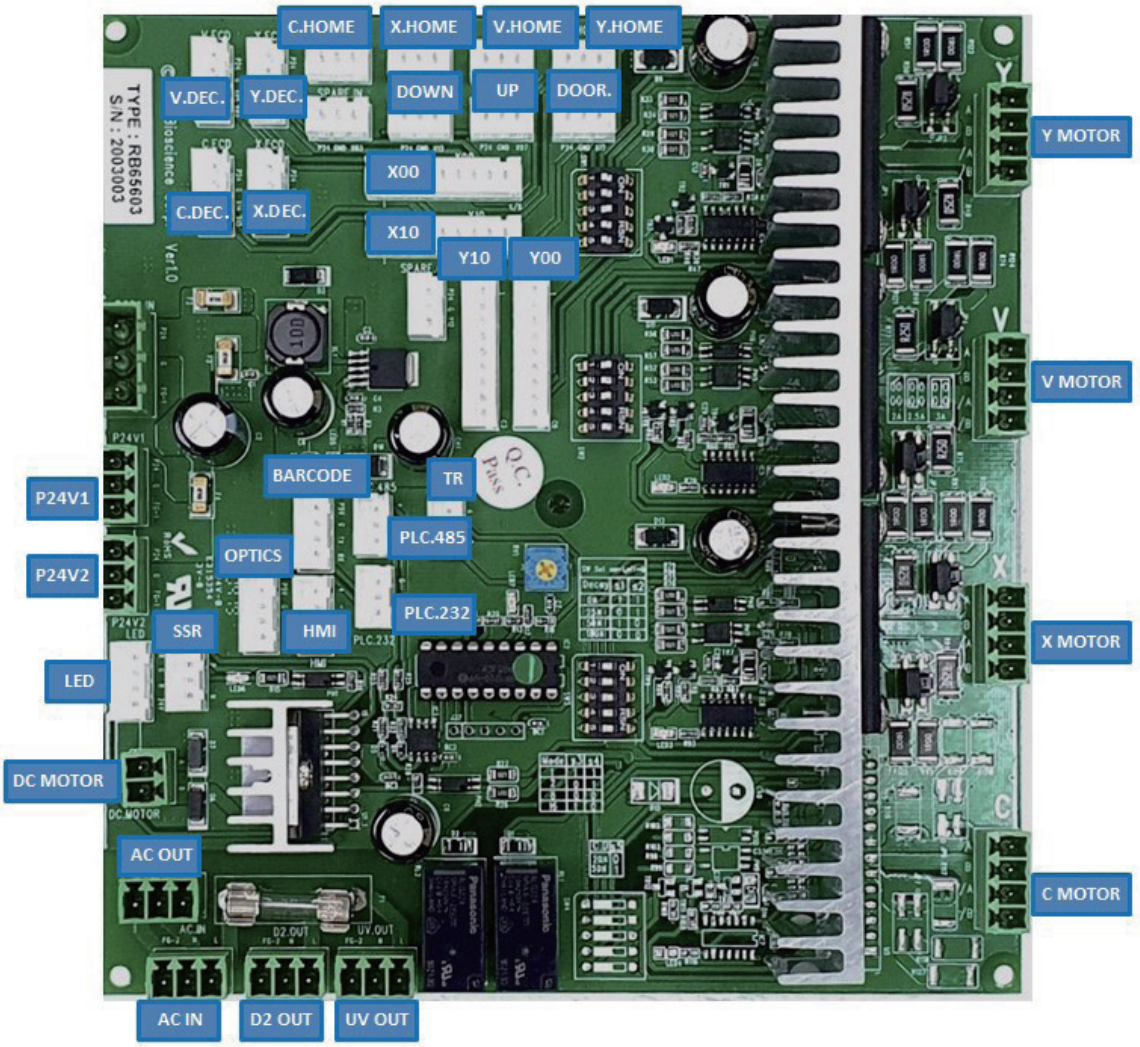

PLC configuration

I/O	IN	I/O	IN
X0	Y Motor Encoder Signal(A)	Y0	Y Motor Drive(A)
X1	Y Motor Encoder Signal(B)	Yl	Y Motor Drive(B)
X2	Y Home Sensor Signal	Y2	V Motor Drive(A)
X3		Y3	V Motor Drive(B)
X4	V Motor Encoder Signal A	Y4	X Motor Drive(A)
X5	V Motor Encoder Signal B	Y5	X Motor Drive(B)
X6	V Home Sensor Signal	Y6	C Motor Drive(A)
X7	UP Sensor Signal	Y7	C Motor Drive(B)
X8		Y8	
X9		Y9	
X10	X Motor Encoder Signal(A)	Y10	M DC Motor JOG
X11	X Motor Encoder Signal(B)	Y11	UV Lamp Switch-Relay
X12	X Home Sensor Signal	Y12	RS232 Switch
X13	Down Sensor Signal	Y13	D2 Lamp Switch-Relay
X14	C Motor Encoder Signal A		
X15	C Motor Encoder Signal B		
X16	C Home Sensor Signal		
X17	Door Sensor Signal		

Copy the engineering software to the desktop

1. Copy the engineering software "SHF16 Install Tool Software" to the desktop.
2. Open the folder and select "EasyDownload_v1.83" (for updating PLC).
3. Open the folder and select "PM_2.0.5.11" (for updating HMI).

Install the HMI updating software

1. Open "PM_2.0.5.11" folder.
2. Open the file, "OemKeyV3_00.txt", and copy the key serial number.
3. Select "PM Designer Version 2.0.5.11" to install the software.

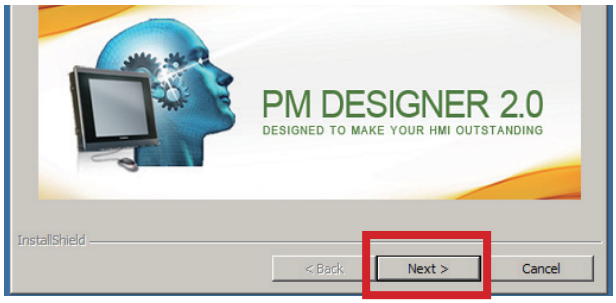

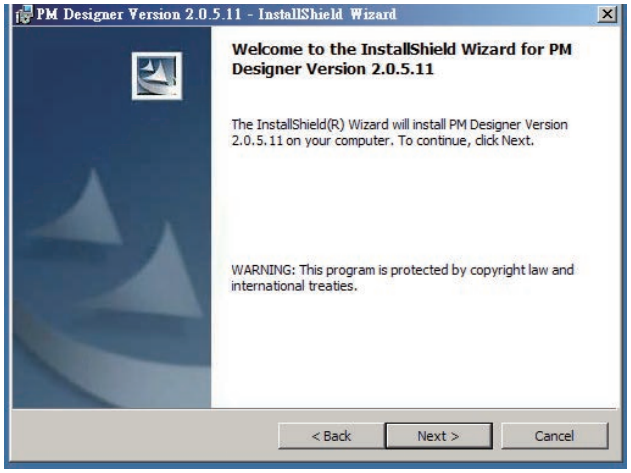

4. Input the serial number in "Serial Number"

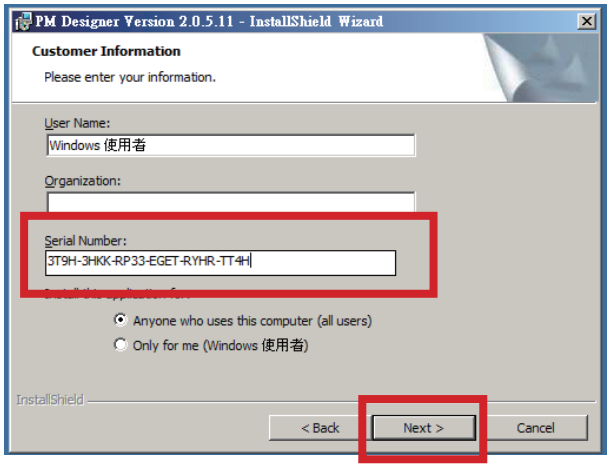

5. Select a destination folder.

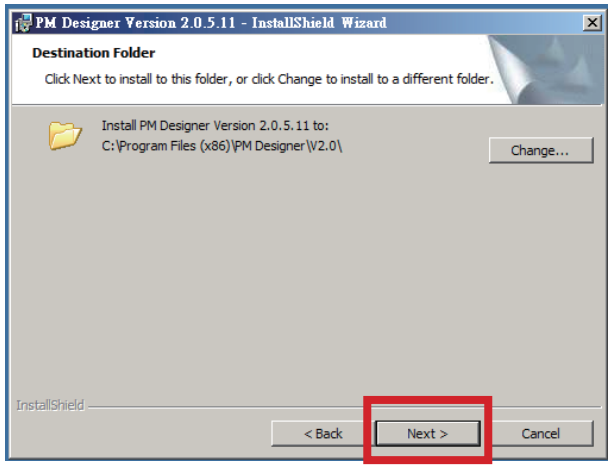

6. Press Install to install the software.

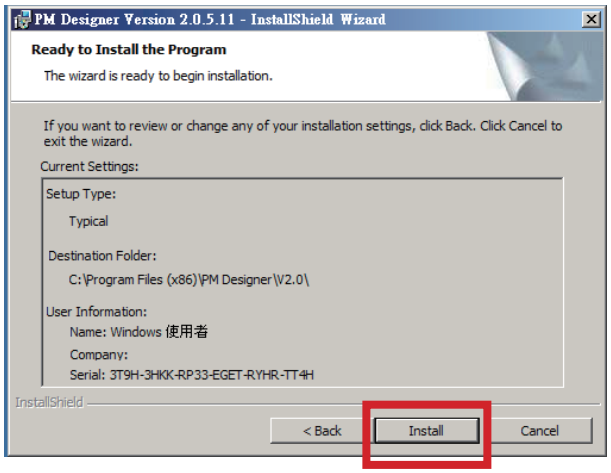

7. After the installation process is finished, please click "finish" to complete the installation.

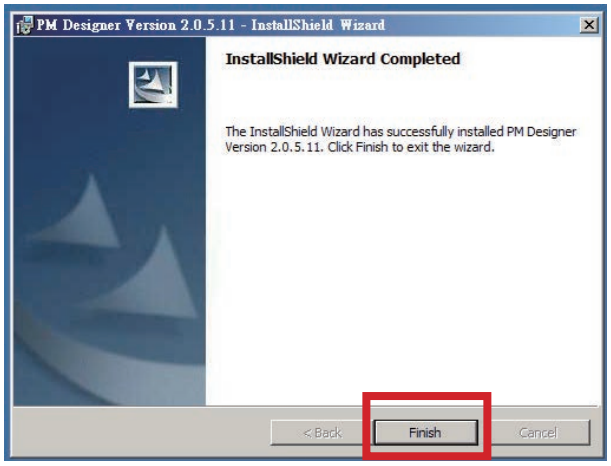

Create an uploading folder

1. Select the icon of PM Designer at the folder or desktop.

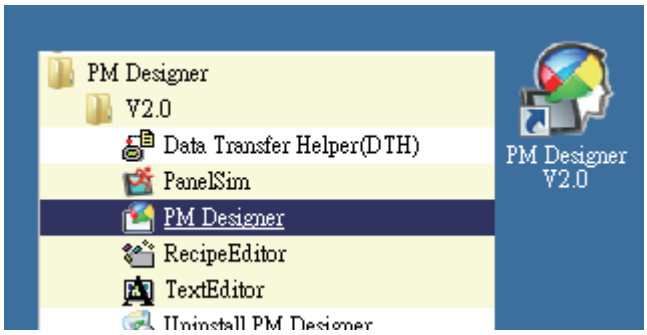

2. Select New in the File to create new data.

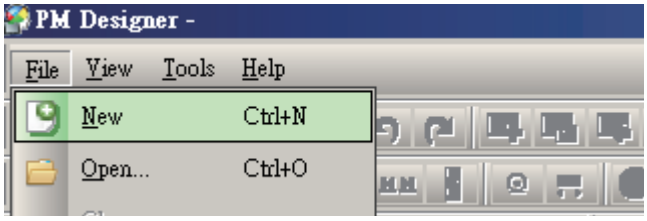

3. Input "Update" at the project name column and press "Next".

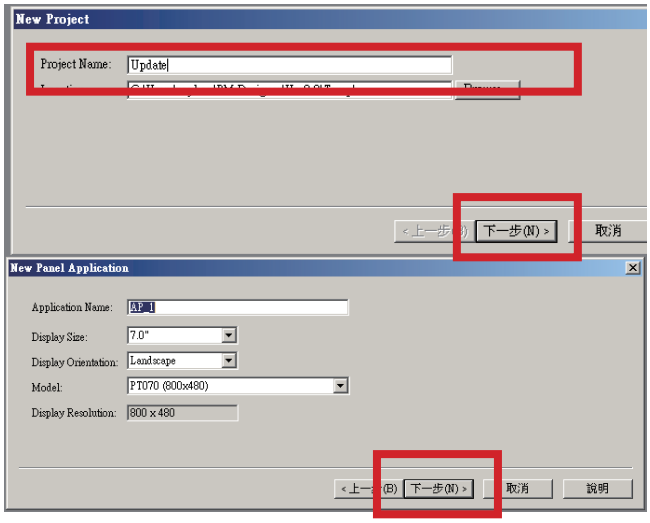

4. Select a connecting method and then press Next.

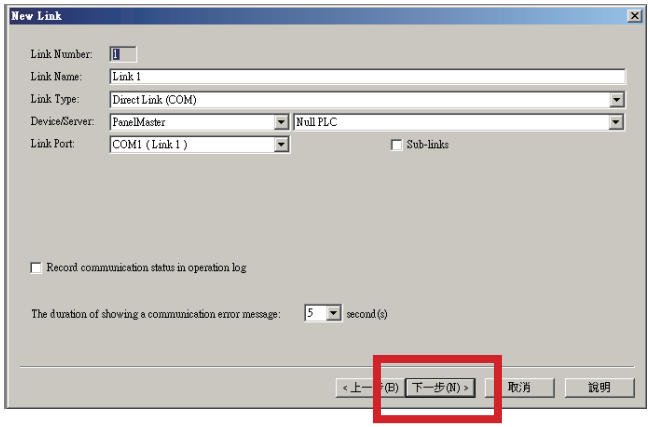

5. Confirm the transmission parameter and press "Finish".

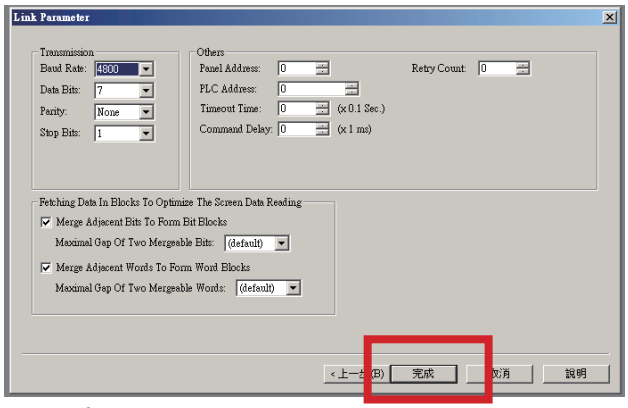

6. Confirm that the new project has been created.

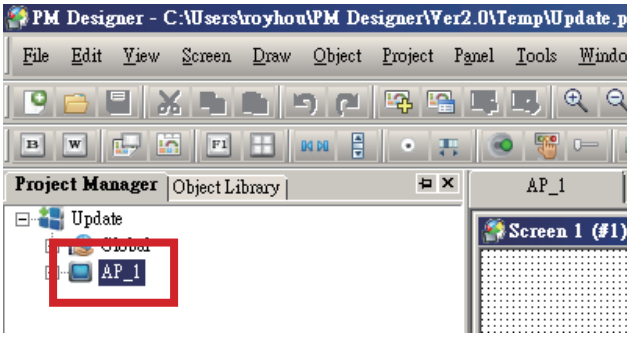

7. Select File -> Exit and close the software.

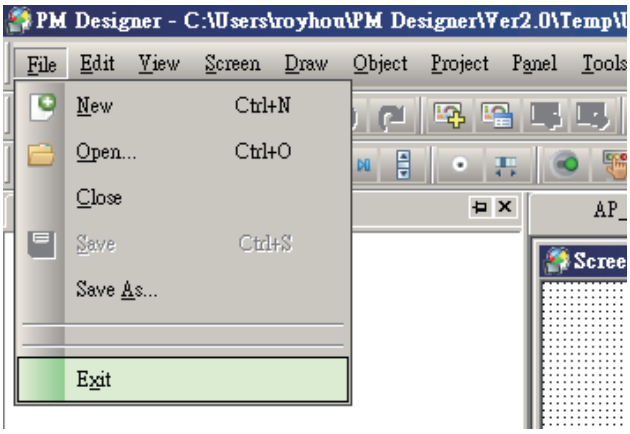

Install the driver

1. Connect HMI to the computer by a transmission wire .
2. If the driver fails to be installed successfully, please enter the “Control Panel” to modify the settings.



3. Please enter the “Control Panel” and select “hardware and Sound” , and then select “Device manager” .

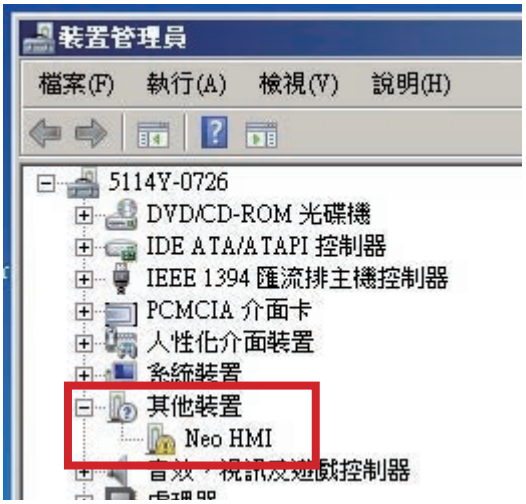

4. Select “NEO HMI” in “Other Devices” .

5. Select “Update Driver” at the “General” subpage.

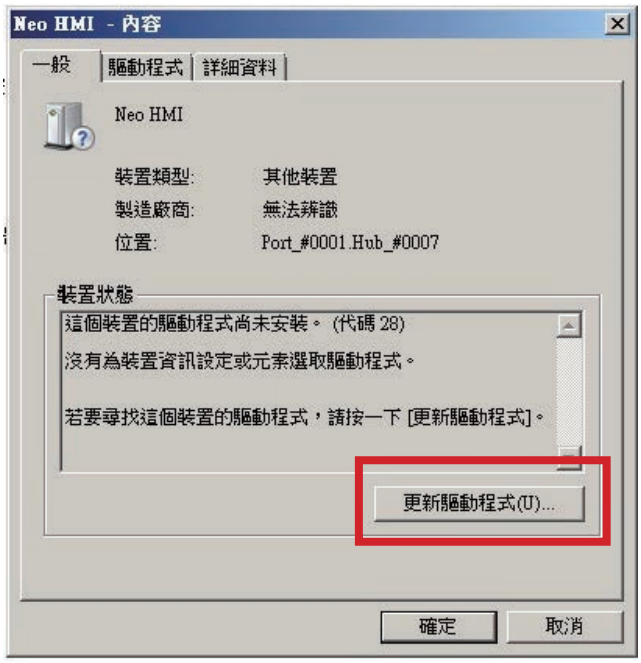

6. Select “Browse my computer for driver software”

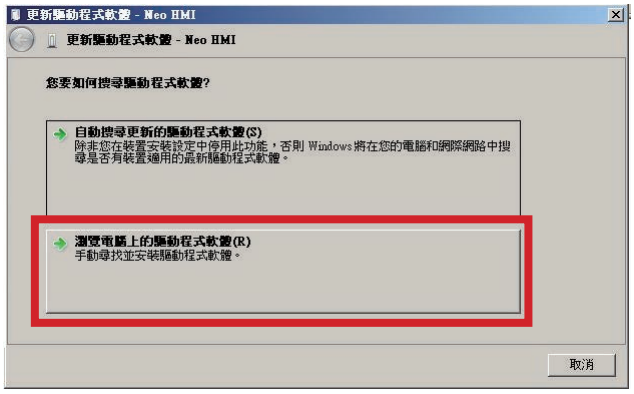

7. Select “Browse” to search the “Program Files(X86)” in your C drive to find the sub-folder, “PM Designer” .



8. Find the “V2.0” folder at the sub-folder, “PM Designer”, and select “Usb” folder at the “V2.0” folder and press “Confirm”.

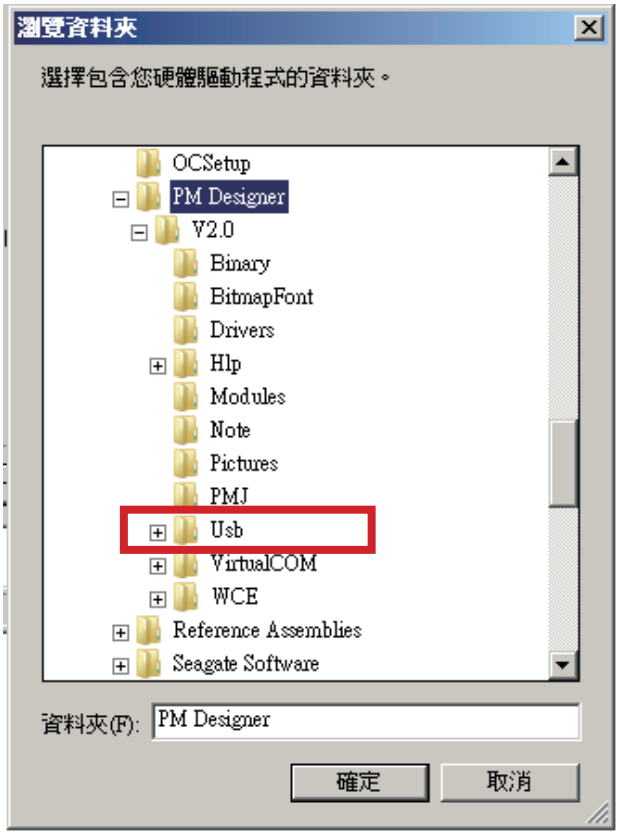

9. Select "Trust the source of the software" and install it.



10. The update is finished.



HMI updating

A Male - B Male USB Cable



1. Connect HMI to the computer by a USB transmission wire.

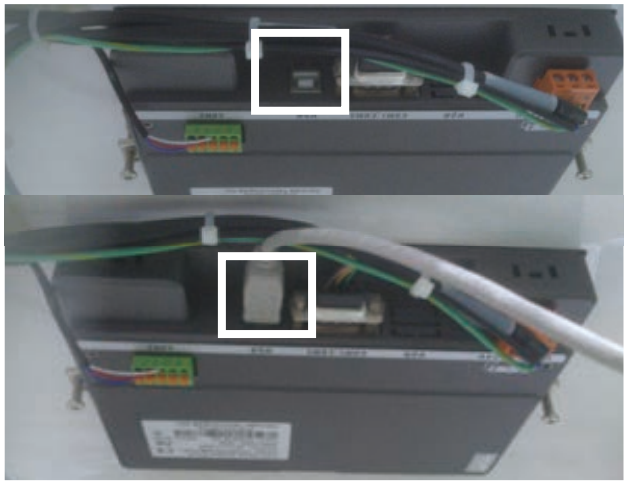

2. Start the PM Designer software.

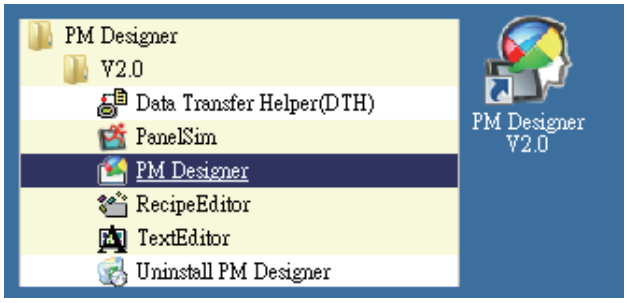

3. Press the download icon.

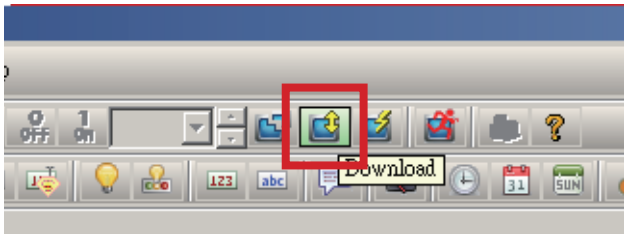

4. Select the prp file to be uploaded.

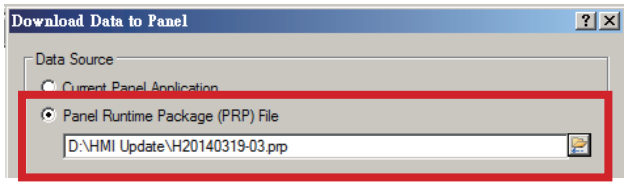

5. Select a connection mode.



6. Start to begin the upload and finish the updating.

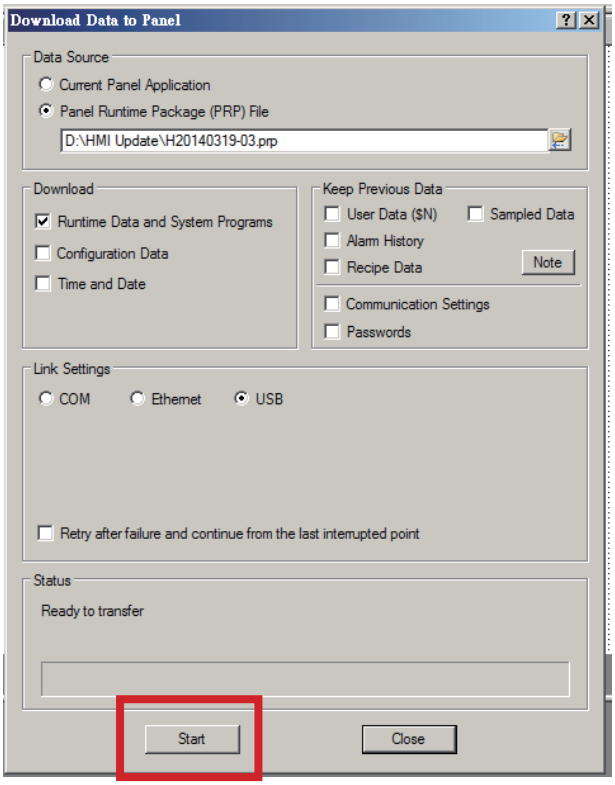

PLC updating

1. Turn off the power supply of the machine.

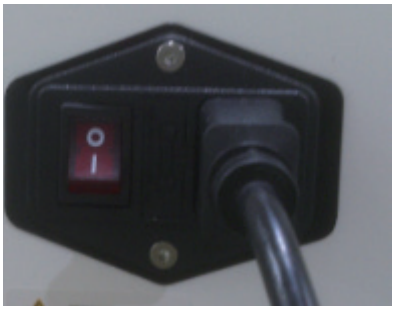

2. Open The Top Service Lid

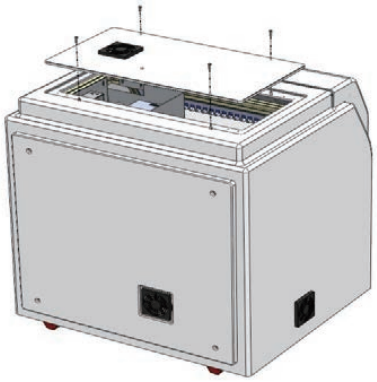





Combine two cables

3. Change the switch of the PLC from "Run" to "Stop", and replace the connection wire with the PLC-RS232 communication connection wire.

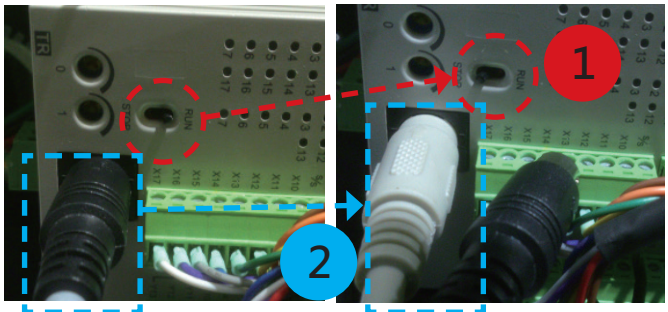

1 Switch "RUN "to "STOP



2 Disconnect original Cable and change to "PLC RS232 Cable "

4. Connect to your laptop

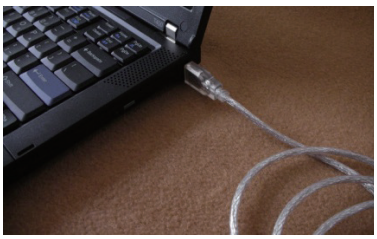

5. Power ON

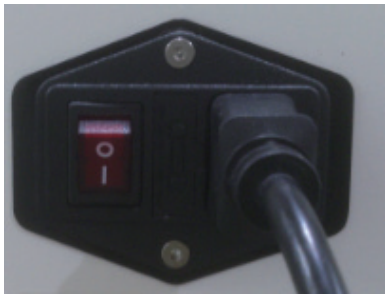

6. Open the "EasyDownload_v1.83" folder and open "EasyClient" software.

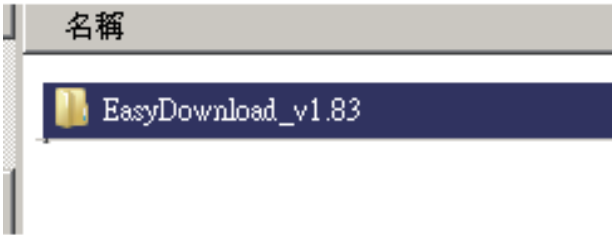

7. Select to write DVZ into PLC and click Next.

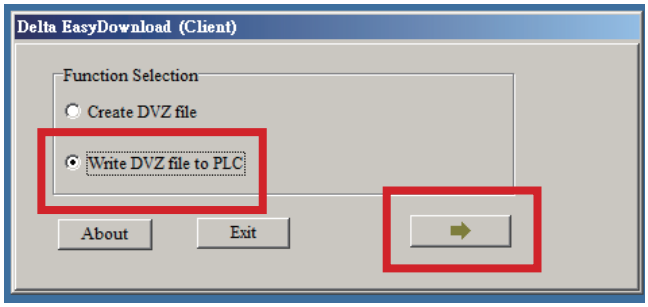

8. Select a DVZ file to be uploaded and press Next.

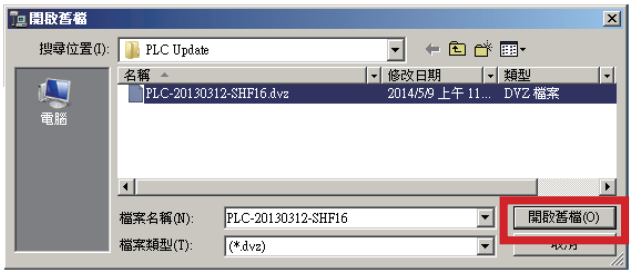

Click the "PLC-xxxx.dvz" File and Click the "Open"

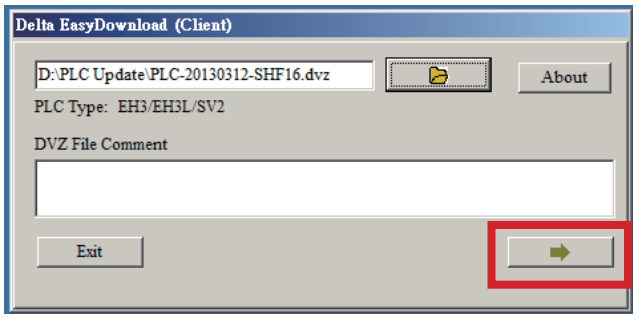

9. Open COM Port

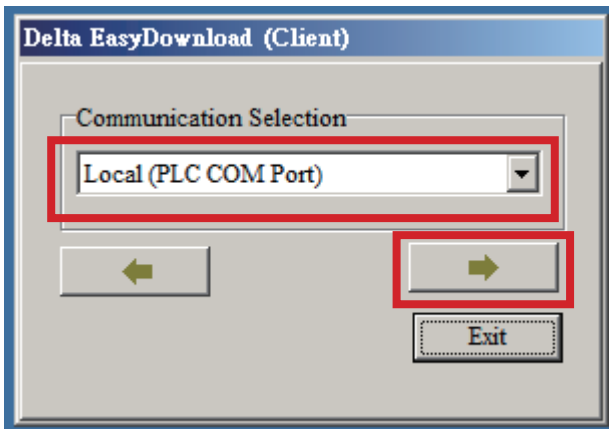

10. Select a communication method and click "Download" to start the download.

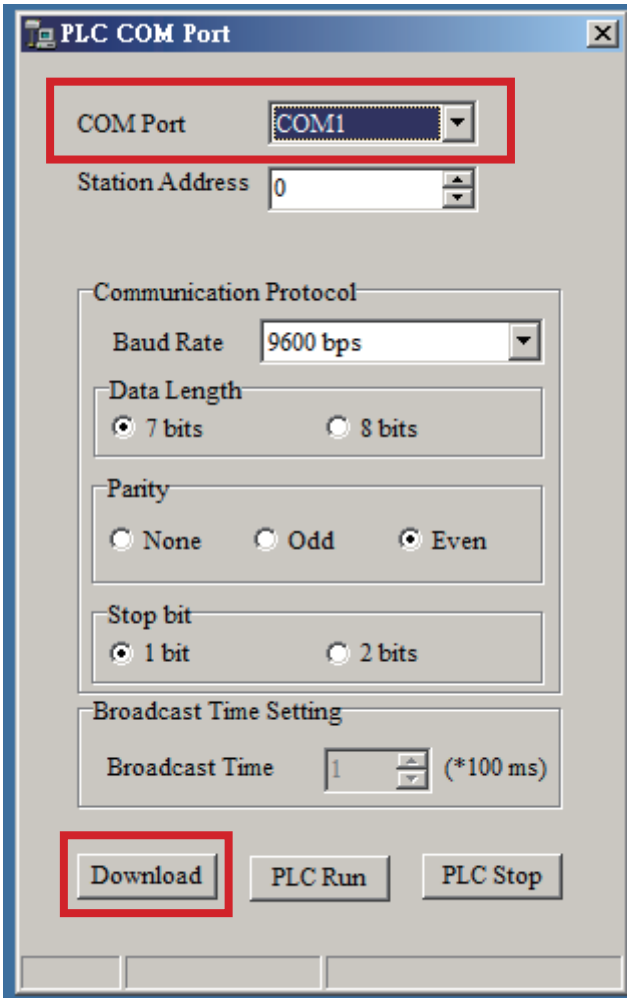

11. After the screen shows "Download Completed", please select "Confirm" to finish the data transmission.

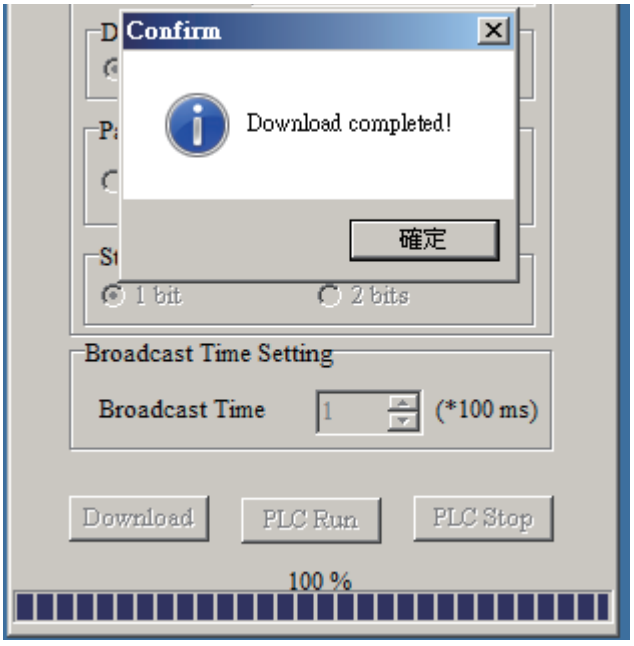

12.Power OFF



13.Reconnect the original connection wire and change the switch to "Run" to finish the installation.

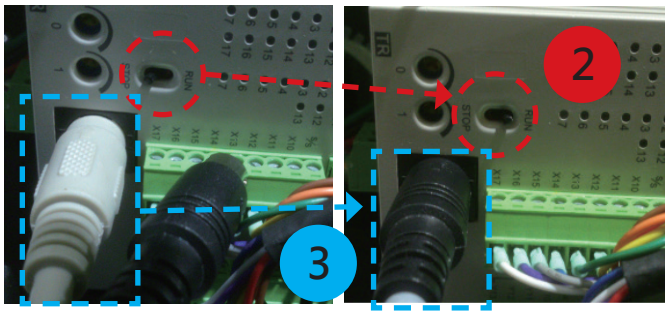

2 Switch "STOP "to "RUN

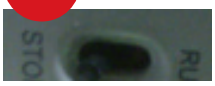

3 Disconnect "PLC RS232 Cable "and change to original Cable "

14. Power ON

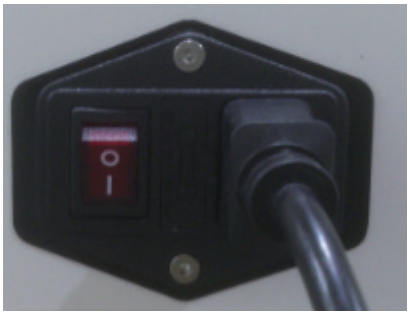

Position Teaching Tools

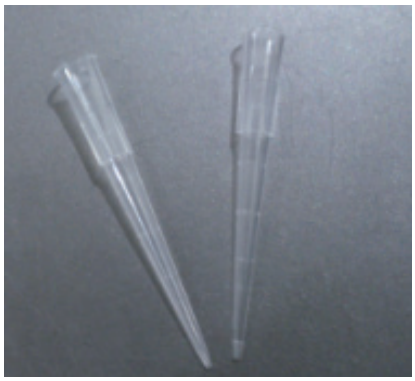

200 µl SP Tip

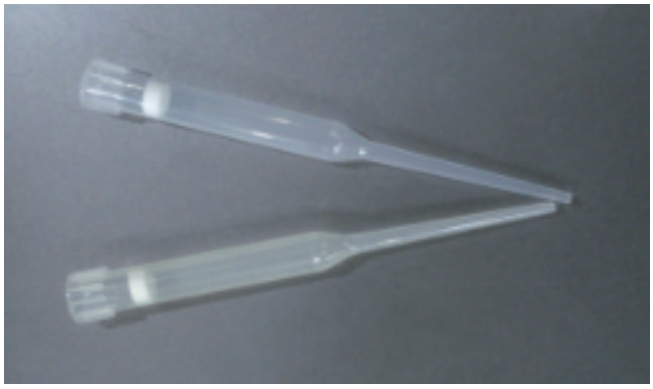

Pipette Tip

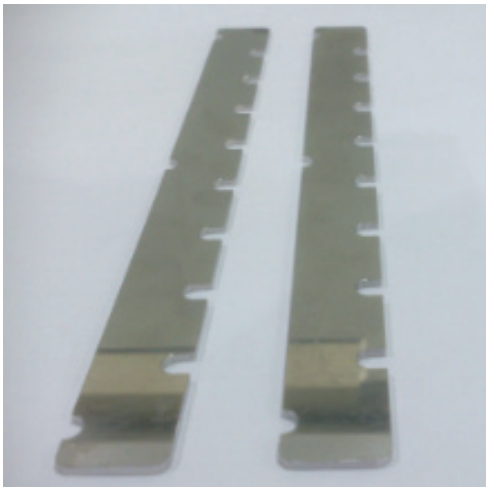

tool A



tool B



tool C

The pre-operation before calibration

1. Select Maintenance.

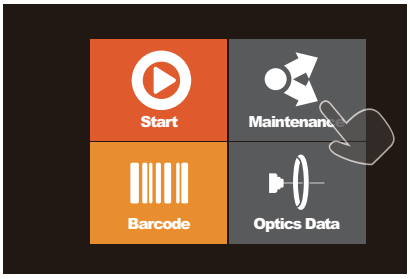

2. Select Vender and input password.

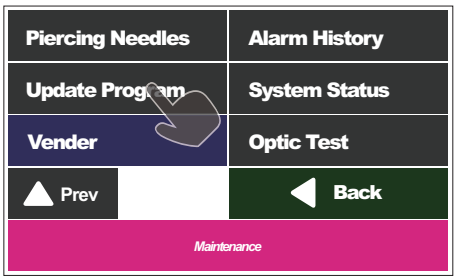

3. Select Teach Position and enter the teaching page.

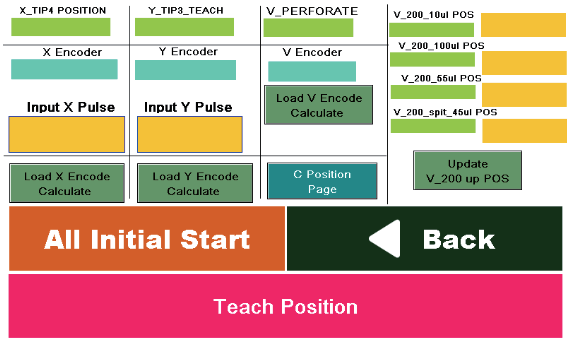

4. The wiring configuration on the connector of the motor on the main board.

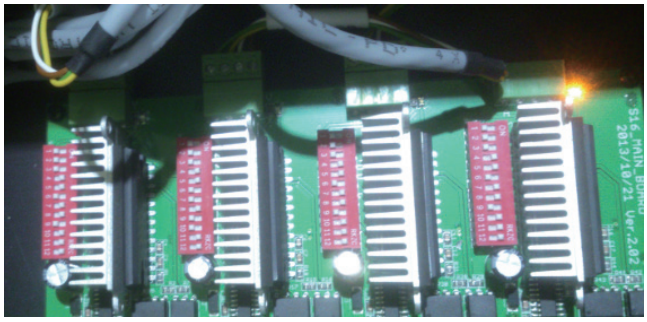

Y V X C

Disconnect X ,Y , C Motor Power Cable

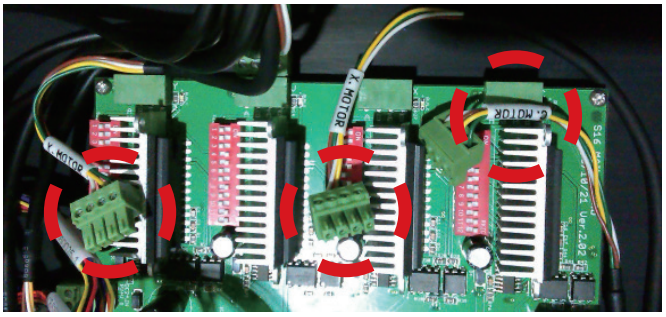

X-axis calibration

1. Remove the connectors to the X-axis, Y-axis, and C-axis motors from the main board. (Refer to page 75)
2. Put the 200µl SP Tips at the W4 at the two ends of the T-rack.

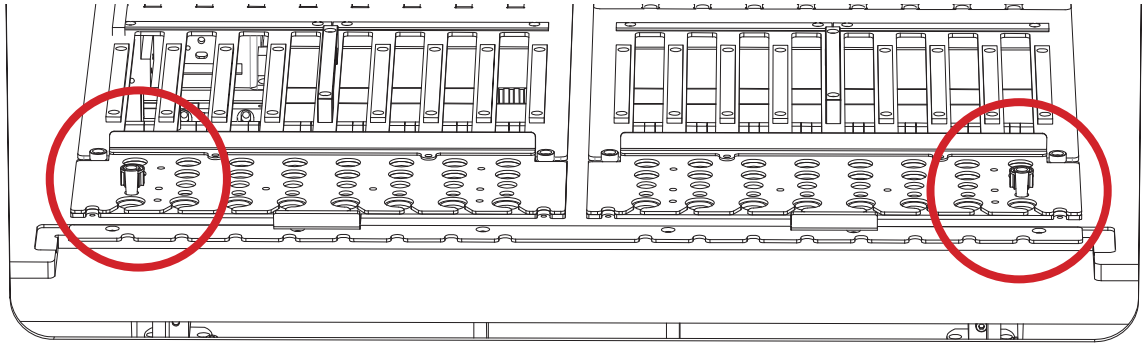

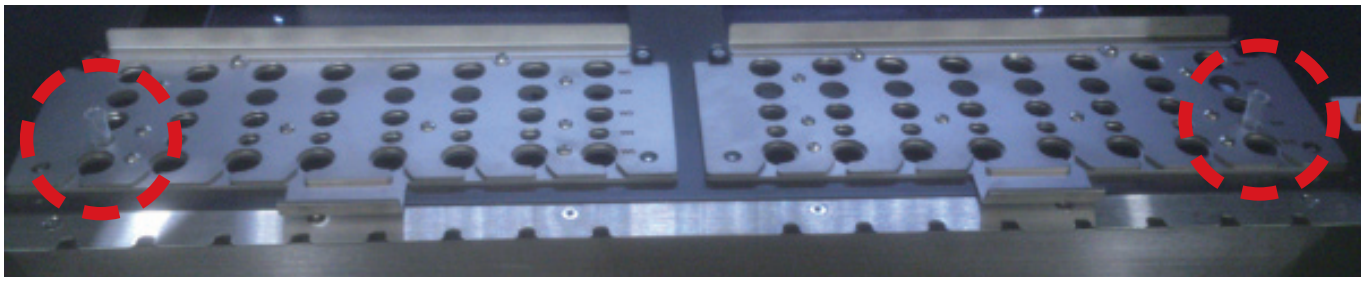

3. Move the X-axis and Y-axis to the position where the 200µl SP Tip is located.

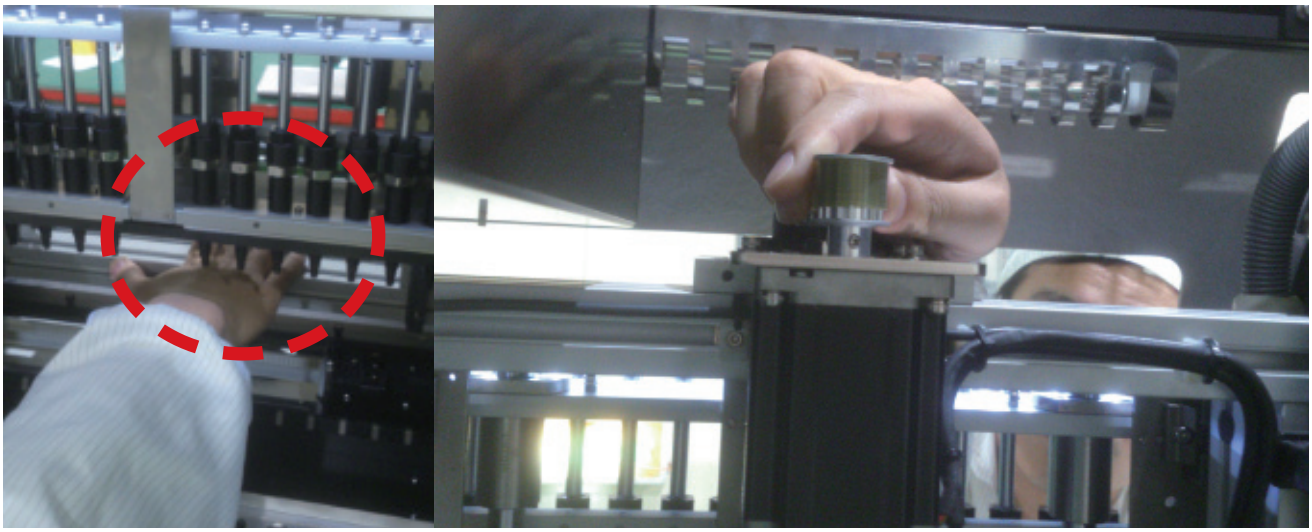

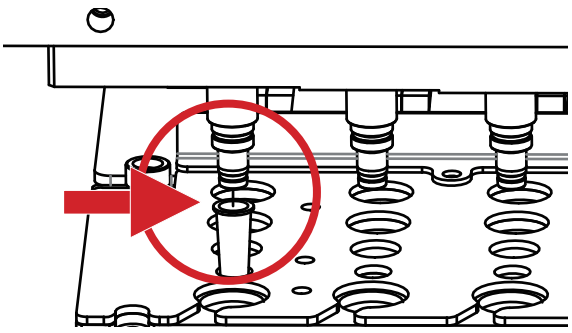

Move the piston to align with the tip.

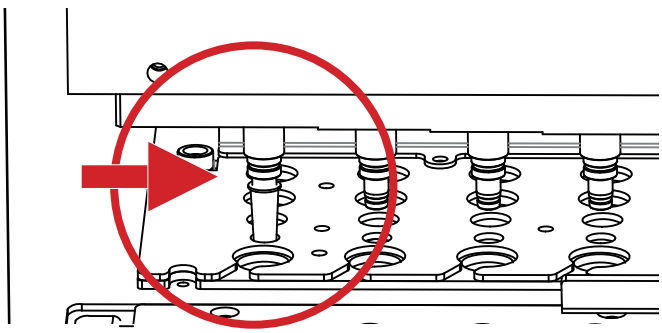

Push it downward and insert the piston into the tip.

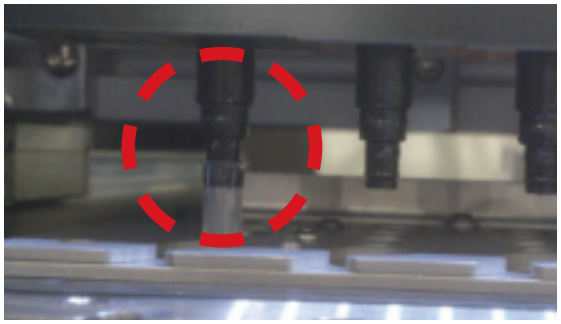

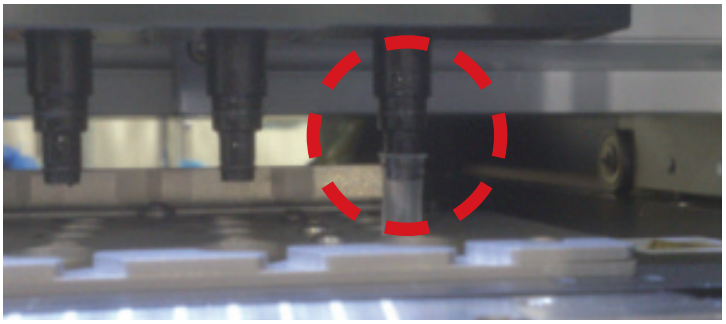

4. Select "Input X Pulse" and input the X Encoder value shown at the top side, and then select "Load X Encode Calculate".

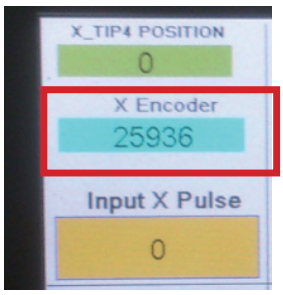

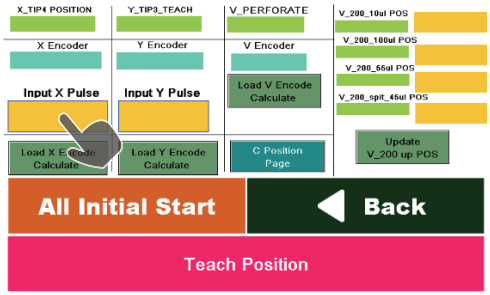

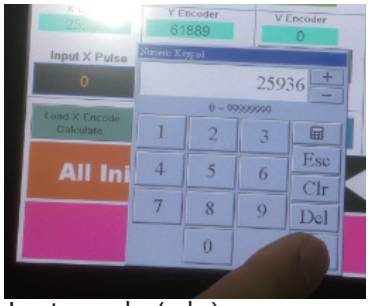

Input new value (pulse)

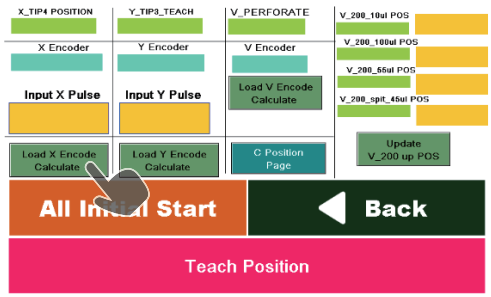

Press the "Load X Encoder Calculate"

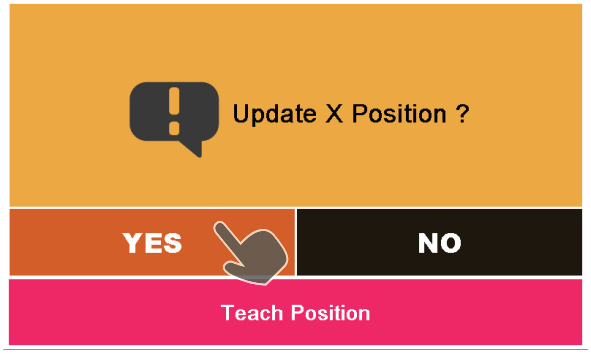

5. Select "Yes" to update the position of the X-axis.
6. Replug the connectors of X-axis motor to the main board.

Y-axis calibration

1. Remove the connectors to the X-axis, Y-axis, and C-axis motors from the main board. (Refer to page 75)
2. Put the Pipette Tips (1200 µl) at the W3 at the two ends of the T-rack.
3. Move the X-axis and Y-axis to the position that the piston take out the Pipette Tip, and press it until the piston completely inserts into the Tip.

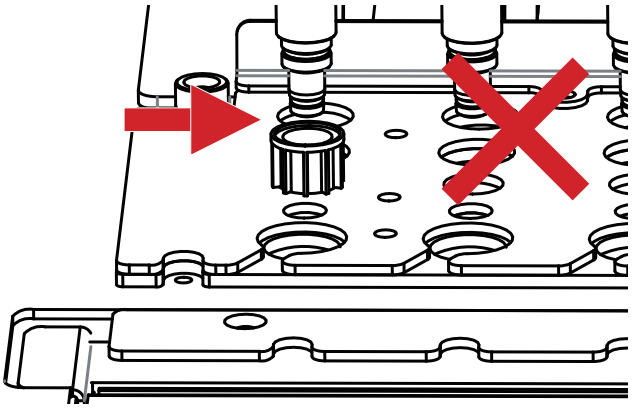

Wrong: does not completely insert into the piston

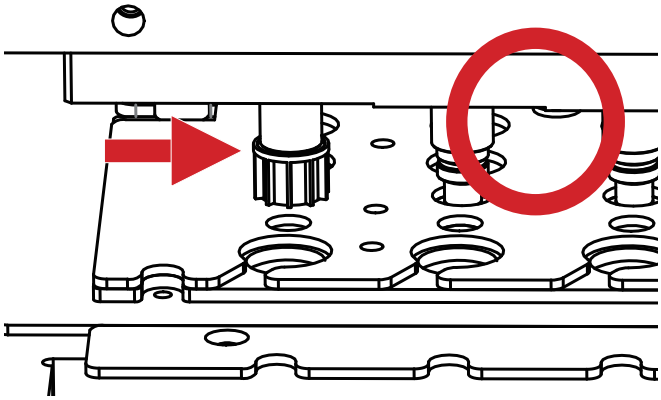

Correct: completely insert into the piston

4. Select "Input Y Pulse" and input the Y Encoder value shown at the top side, and then select "Load Y Encode Calculate".

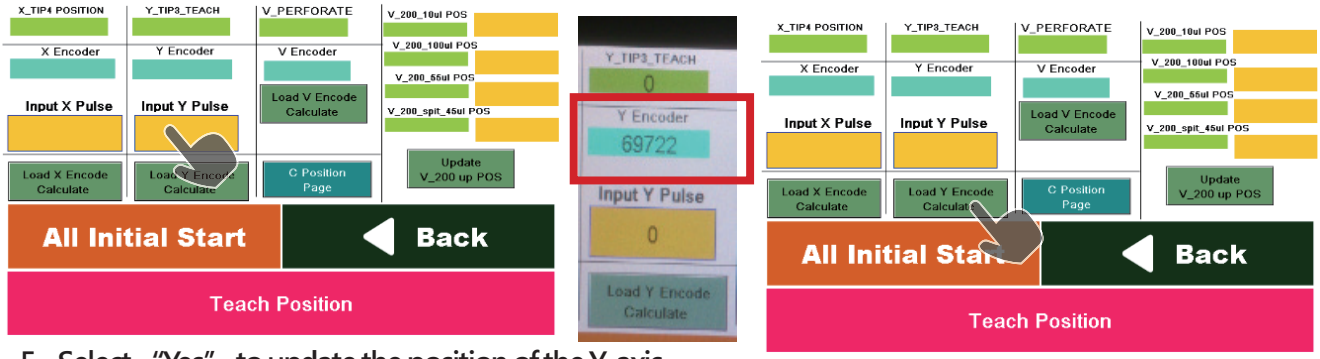

5. Select "Yes" to update the position of the Y-axis.

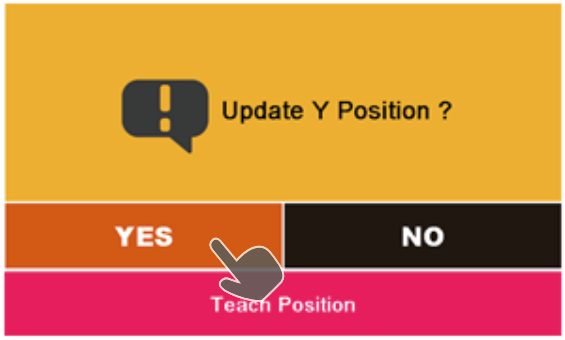

6. Replug the connectors of Y-axis motor to the main board.

C-axis calibration (Magcore Super Only)

1. Remove the connectors to the X-axis, Y-axis, and C-axis motors from the main board. (Refer to page 75)
2. Select "C Position Page" at the "Teach position" page to enter the C-axis correction page.

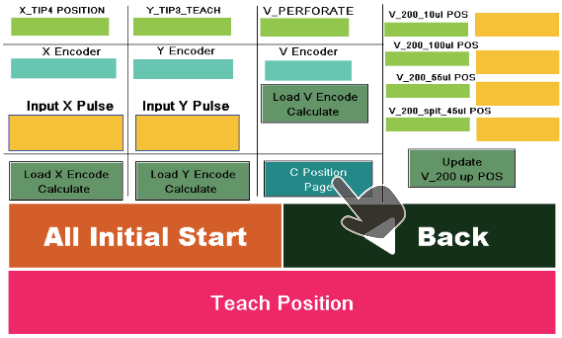

3. Insert teaching tool A into the area below the fixation plug of the cartridge rack.

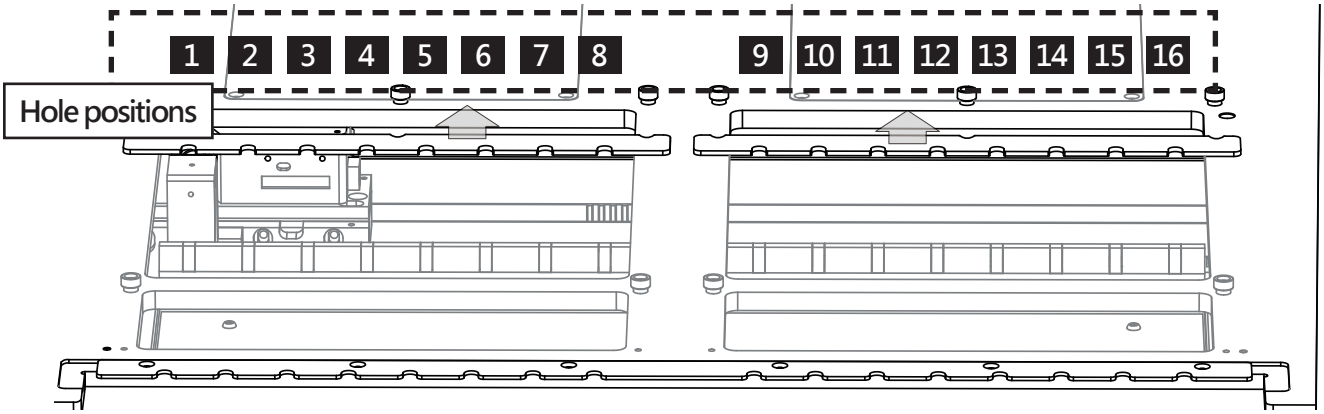

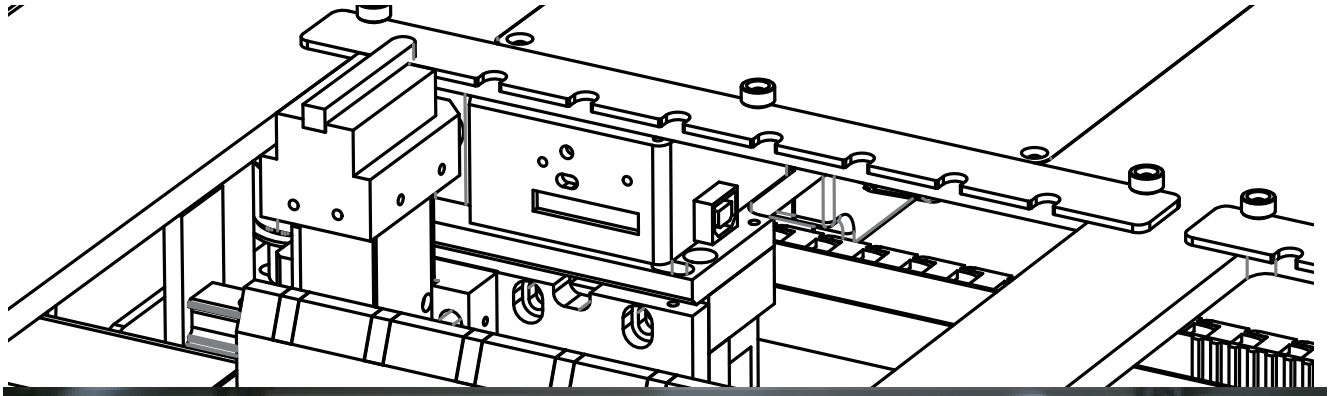

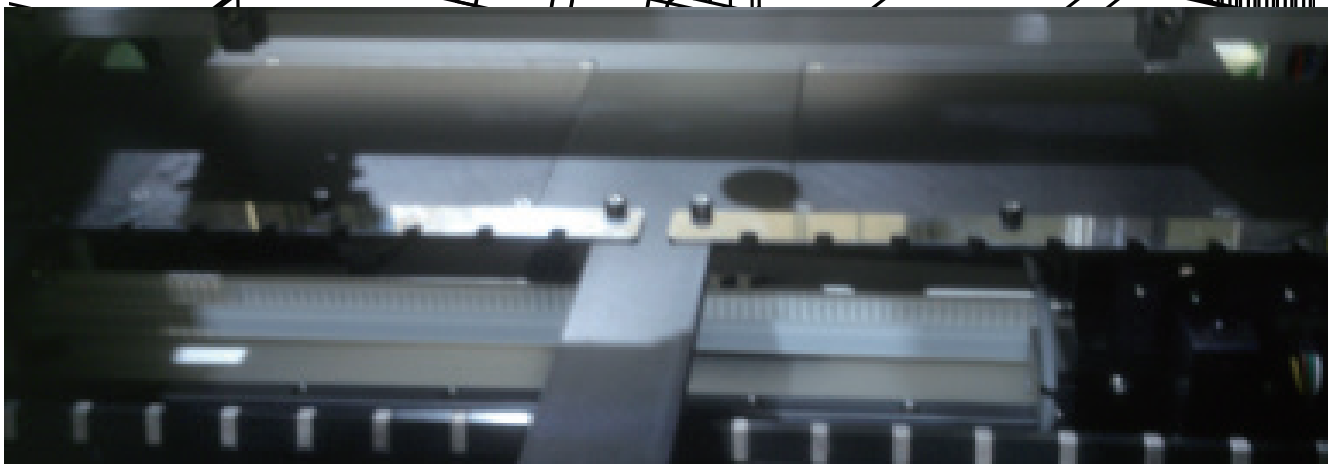

4. [1] Align tool B with the holes on tool A.
   [2] Insert tool C to fix the relative position between the tool A and the tool B.

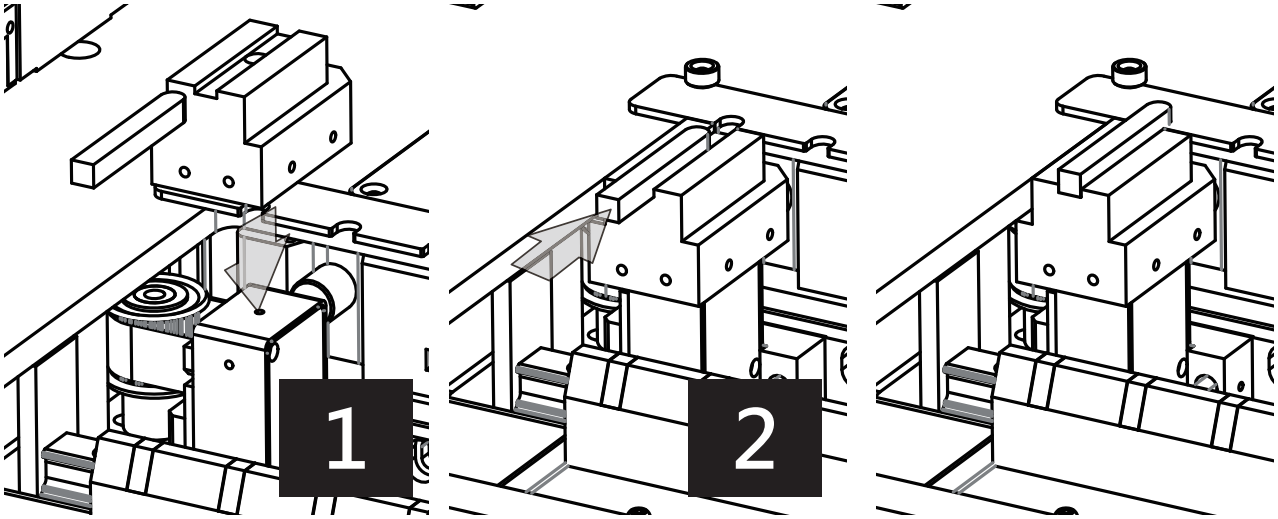

Calibrate C1 Position

Tool B

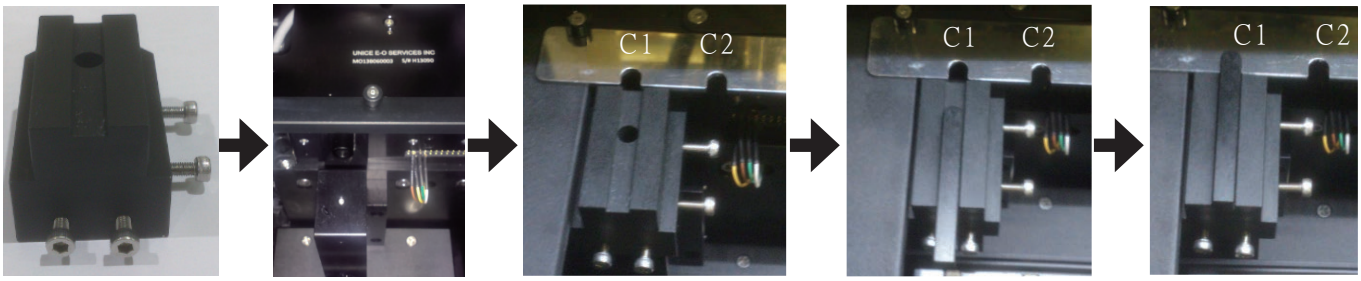

Insert Tool C

Insert Tool C

5. Press "Load C1" and hold for two seconds. Check whether the value of the C Encoder has been written into the C Slot 01 on the right side.

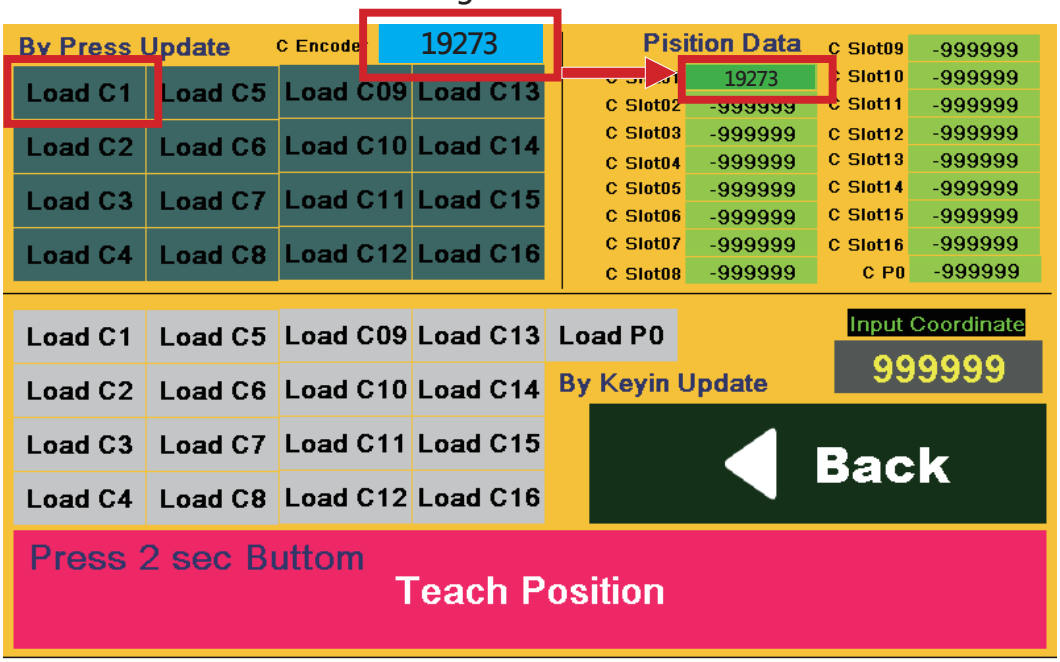

7. Perform the correction of all the 16 hole positions in order.
8. Remove tool A, B and C after all calibrations are finished.
9. Replug the connectors of C-axis motor to the main board.

Optics Data

Automatic Optical Measurement

- The optical module provides O.D. A_{260} and A_{280} measurement of individual samples. (O.D. detection range: ABS <6.)
- A320 Normalization
- Disposable cuvettes.

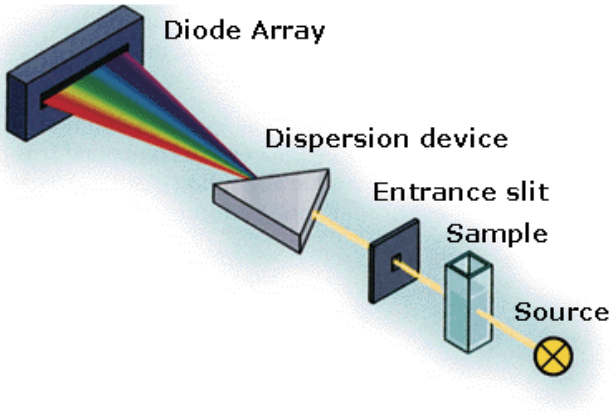

Deuterium Lamp

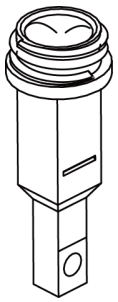

RBC Cuvette

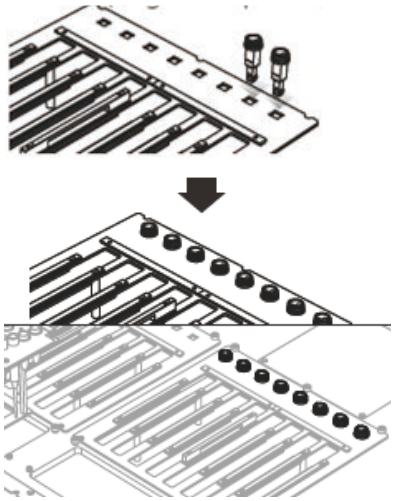

Optical Calibration Flow Chart

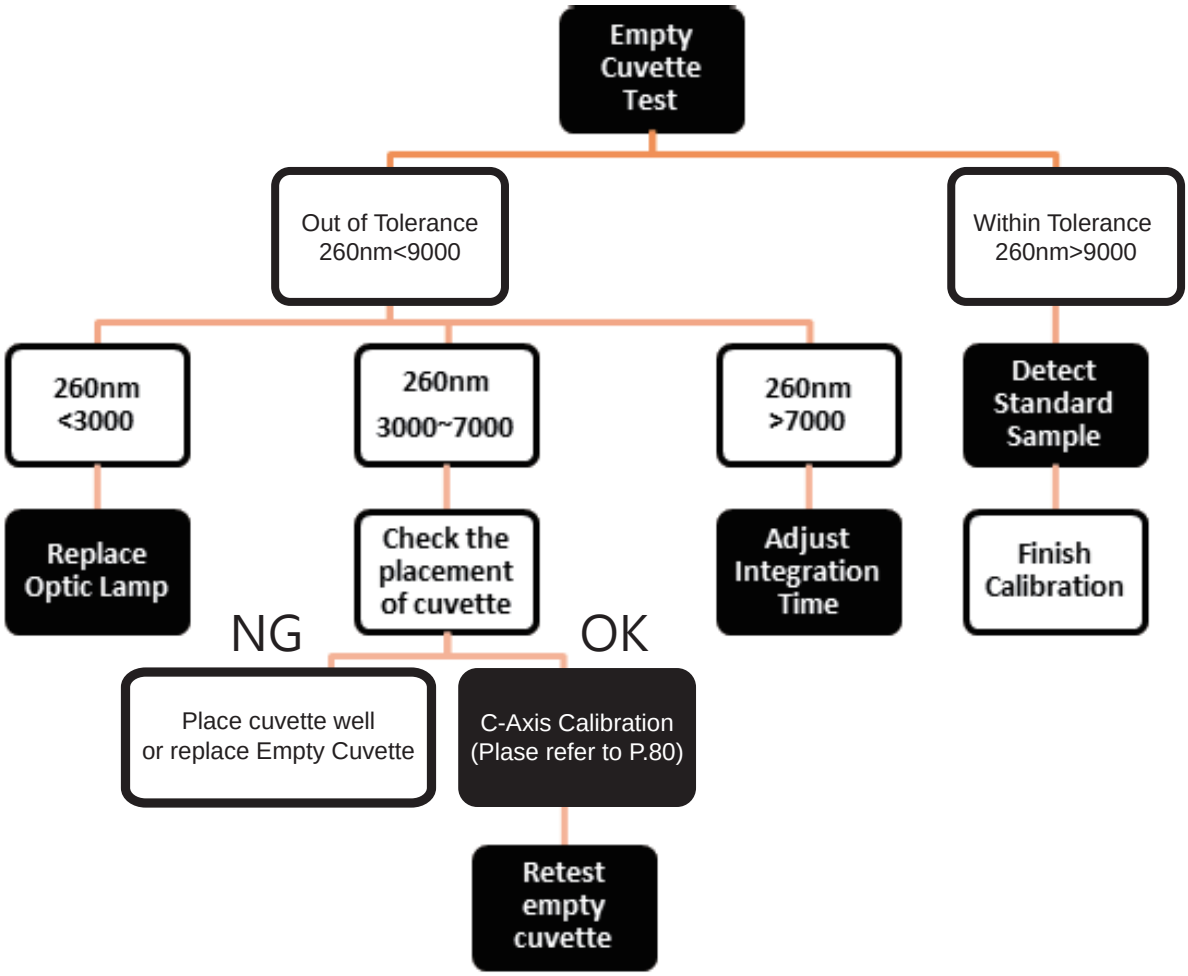

Empty Cuvette Test of standard cuvette

1. Place the cuvette into the cartridge rack.

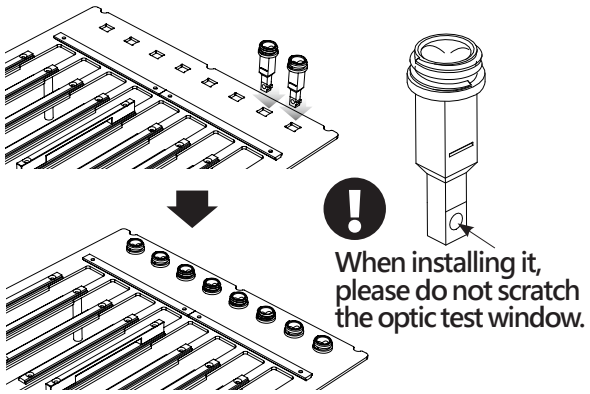

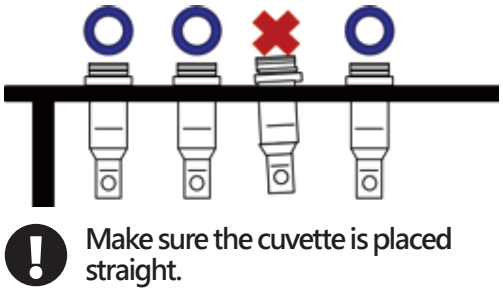

2. Enter the optic test page and select empty cuvette.

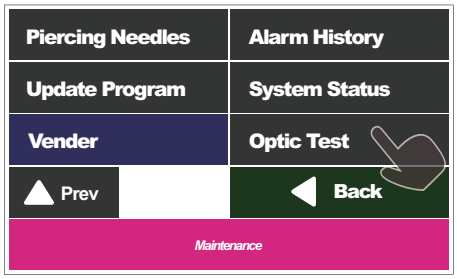

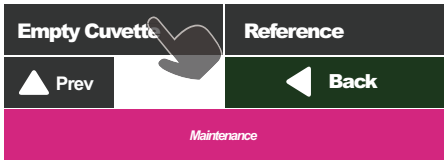

3. Wait for 15 min and press " Start " to perform the test.



4. The screen will show the measurement value after the test finished.

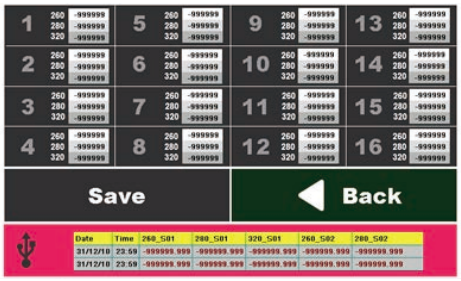

5. Compare the data with the value in inspection report. The tolerance range is as the table shown below.Compare the data with the value in inspection report. The tolerance range is as the table shown below.

Wavelength	Tolerance
260 nm	±750
280 nm	±1250
320 nm	±1250

6. Adjust the optical system as shown in the flow chart according to the count value.

Standard Cuvette Vaule

S16C001514196
Integration Time : 8 mins

Wavelength	*Value*
260mm	*10437*
280mm	*18107*
320mm	*17475*

S16C001614196
Integration Time : 8 mins

Wavelength	*Value*
260mm	*10291*
280mm	*19481*
320mm	*18124*

S16C001714196
Integration Time : 7 mins

Wavelengh	*Value*
260mm	*10172*
280mm	*20006*
320mm	*17944*

S16C001814196
Integration Time : 7 mins

Wavelengh	*Value*
260mm	*9158*
280mm	*19829*
320mm	*18786*

If the value is out of tolerance range, adjust the integration time as instructed on the next page.

Adjust integration time

1. Enter the vender page, and key in the password.

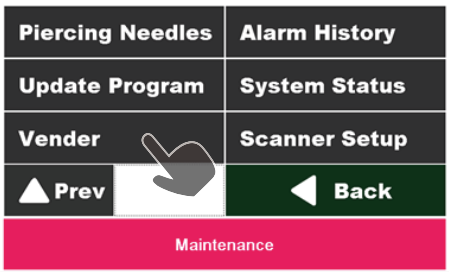

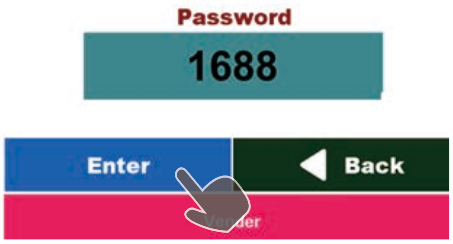

2. Enter optic parameter page.

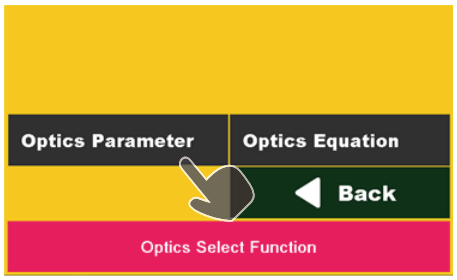

- If the count values are higher than the range, decrease the integration time by 1 min.
- If the count values are lower than the range, increase the integration time by 1 min.
- Press "Integration Time" to adjust the time, and press"Finish to complete the adjustment.

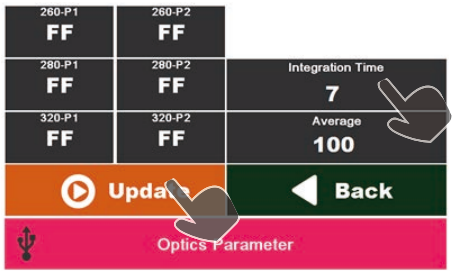

3. Press "Update" to finish the adjustment.
4. Note that Empty cuvette test should be performed after changing the integration time.

Wavelength	*Tolerance*
260mm	*±750*
280mm	*±1250*
320mm	*±1250*

Start Optical Measurement

(MagCore Super only)

1. Please select the Optics Data button in the main menu.

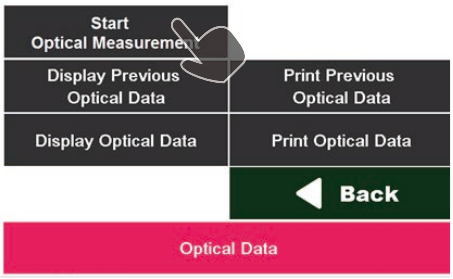

2. System will ask you whether or not to scan the barcode.

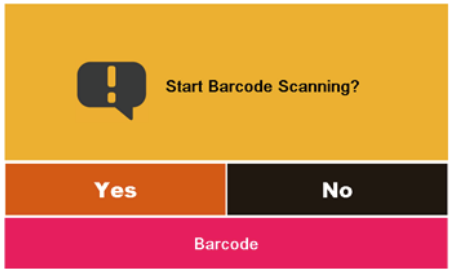

3. Select the sample type of the sample to undergo optical detection. Select "DNA" for the standard sample provided from RBC.





4. Put 60 µL reference solution into the cuvette and place cuvette into cartridge rack.
5. After 15 min warming up, press "Start" to perform detection.

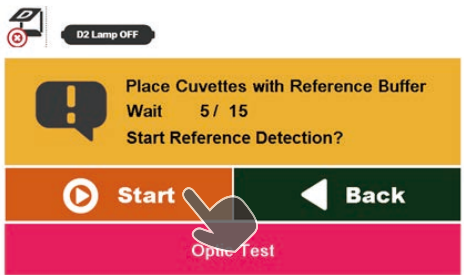

6. After detection, remove the liquid in the cuvette. Centrifuge briefly and remove the residual liquid. Put 60 µL standard solution into the cuvette. The liquid transfer should be completed within 5 min.

   (Prepare standard solution according to the data sheet which comes with the Standard Reference Set.)

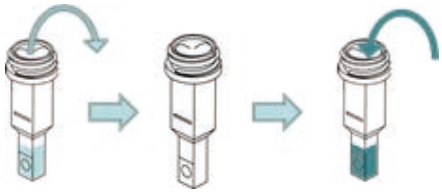

7. Place the cuvette with standard solution back into the same well of cartridge rack.

   Press "Start" to continue the sample detection.

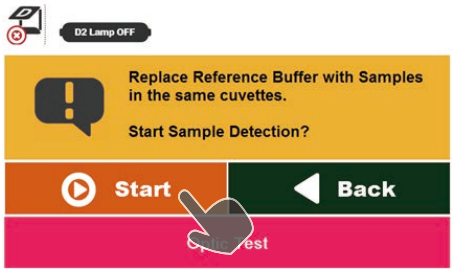

8. The detection is complete. You can select to browse or print the result.

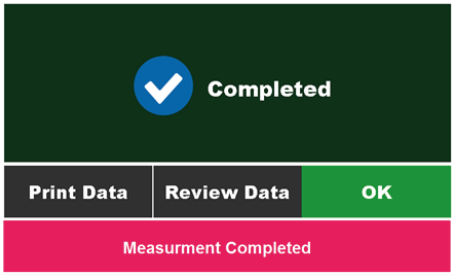

Trouble Shooting for Alarm Code

Code No.	Content	Causes and solutions
4	DC Motor Up Time Out	[Causes] The motor is not functional or the block plate of the sensor is at the wrong position. [Solutions] (1) Check whether the motor is properly functioning. (2) Check whether the cable dropped off. (3) Adjust the position of the block plate of the sensor.
5	DC Motor Down Time Out	[Causes] The motor is not functional or the block plate of the sensor is at the wrong position. [Solutions] (1) Check whether the motor is functioning properly. (2) Check whether the cable has dropped off. (3) Adjust the position of the block plate of the sensor.
6	Y_SoftLimt+	[Causes] Manual Y JOG+ operation exceeds the distance programmed in the software. [Solutions] (1) Alarm Reset (2) Manual Y JOG- operation
7	Y_SoftLimt-	[Causes] Manual Y JOG- operation exceeds the distance programmed in the software. [Solutions] (1) Alarm Reset (2) Manual Y JOG- operation
8	Y_Encode no change	[Causes] No signal response from the Encoder. [Solutions] (1) Replace the cable connected to the Encoder. (2) Replace the motor module.
9	Y_Position Over 60 Pulse	[Causes] The position command coordinate is vastly different to the Encoder coordinate. [Solutions] (1) Check whether the terminal of the PLC Y00 Cable has dropped off. (2) Replace the cable connected to the power of the motor. (3) Replace the main board. (4) Replace the motor module.

Code No.	Content	Causes and solutions
10	Y_Home Sensor Fail	[Causes] When performing the motor initial, the Home sensor has no response and the motor collides into a hard stop. [Solutions] (1) Check whether the cable has dropped off. (2) Replace the sensor.
11	V_SoftLimt+	[Causes] Manual V JOG+ operation exceeds the distance programmed in the software. [Solutions] (1) Alarm Reset (2) Manual V JOG- operation
12	V_SoftLimt-	[Causes] Manual V JOG- operation exceeds the distance programmed in the software. [Solutions] (1) Alarm Reset (2) Manual V JOG+ operation
13	V_Encode no change	[Causes] No signal response from the Encoder. [Solutions] (1) Replace the cable connected to the Encoder. (2) Replace the motor module.
14	V_Position Over 60 Pulse	[Causes] The position command coordinate is vastly different to the Encoder coordinate. [Solutions] (1) Check whether the terminal of the PLC Y00 Cable has dropped off. (2) Replace the cable connected to the power of the motor. (3) Replace the main board. (4) Replace the motor module.
15	V_Home Sensor Fail	[Causes] When performing the motor initial, the Home sensor has no response and the motor collides with hard stop. [Solutions] (1) Check whether the cable has dropped off. (2) Replace the sensor.
16	X_SoftLimt+	[Causes] Manual X JOG+ operation exceeds the distance of the software. [Solutions] (1) Alarm Reset (2) Manual X JOG- operation

Code No.	Content	Causes and solutions
24	C_Position Over 60 Pulse	[Causes] The position command coordinate is vastly different to the Encoder coordinate. [Solutions] (1) Check whether the terminal of the PLC Y00 Cable has dropped off. (2) Replace the cable connected to the power of the motor. (3) Replace the main board. (4) Replace the motor module.
25	C_ Home Sensor Fail	[Causes] When you perform the motor initialization, the Home sensor has no response and the motor collides into a hard stop. [Solutions] (1) Check whether the cable has dropped off. (2) Replace the sensor.
26	Optics Device Off-Line	[Causes] The optical module and PLC are off-line and have no response. [Solutions] (1) Check whether the optical communication cable has dropped off. (2) Replace the optical communication cable. (3) Replace the PLC RS232 optical communication cable (4) Replace the optical module.
27	Y_ Motor Hit Hard stop	[Causes] When you perform the motor initialization, the motor collides into a hard stop. [Solutions] (1) Check whether the terminal of the PLC Y00 Cable has dropped off. (2) Replace the cable connected to the power of the motor.
28	V_ Motor Hit Hard stop	[Causes] When you perform the motor initialization, the motor collides into a hard stop. [Solutions] (1) Check whether the terminal of the PLC Y00 Cable has dropped off. (2) Replace the cable connected to the power of the motor.
29	X_ Motor Hit Hard stop	[Causes] When you perform the motor initialization, the motor collides into a hard stop. [Solutions] (1) Check whether the terminal of the PLC Y00 Cable has dropped off. (2) Replace the cable connected to the power of the motor.

Code No.	Content	Causes and solutions
17	X_SoftLimt-	[Causes] Manual X JOG- operation exceeds the distance programmed in the software. [Solutions] (1) Alarm Reset (2) Manual X JOG+ operation.
18	X_Encode no change	[Causes] No signal response from the Encoder. [Solutions] (1) Replace the cable connected to the Encoder. (2) Replace the motor module.
19	X_Position Over 60 Pulse	[Causes] The position command coordinate is vastly different to the Encoder coordinate. [Solutions] (1) Check whether the terminal of the PLC Y00 Cable has dropped off. (2) Replace the cable connected to the power of the motor. (3) Replace the main board. (4) Replace the motor module.
20	X_Home Sensor Fail	[Causes] When you perform the motor initialization, the Home sensor has no response and the motor collides into a hard stop. [Solutions] (1) Check whether the cable has dropped off. (2) Replace the sensor.
21	C_SoftLimt+	[Causes] Manual C JOG+ operation exceeds the distance programmed in the software. [Solutions] (1) Alarm Reset (2) Manual C JOG- operation.
22	C_SoftLimt-	[Causes] Manual C JOG- operation exceeds the distance programmed in the software. [Solutions] (1) Alarm Reset (2) Manual C JOG+ operation.
23	C_Encode no change	[Causes] No signal response from the Encoder. [Solutions] (1) Replace the cable connected to the Encoder. (2) Replace the motor module.

Code No.	Content	Causes and solutions
30	C_ Motor Hit Hard stop	[Causes] When you perform the motor initialization, the motor collides into a hard stop. [Solutions] (1) Check whether the terminal of the PLC Y00 Cable has dropped off. (2) Replace the cable connected to the power of the motor.
	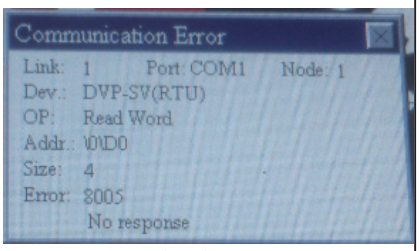 HMI Communication Error	[Causes] HMI, PLC, or the temperature controller has no response. [Solutions] (1) Check whether the main board has damaged (2) Check whether the PLC RS485 and HMI R 485 Cable has dropped off. (3) Replace the main board. (4) Replace the PLC. (5) Replace the HMI.

MagCore®

RBCBioscience



TEL : +886-2-8912-1200
FAX : +886-2-8912-1300
15F, No.15, Qiaohe Rd,Zhonghe Dist,
New Taipei City 235029, Taiwan

http://www.rbcbioscience.com

RBC Bioscience Corp.
15F, No.15, Qiaohe Rd,Zhonghe Dist, New Taipei City 235029, Taiwan
TEL : +886-2-8912-1200 FAX : +886-2-8912-1300

EC REP **Obelis s.a (obelis.net)Bd. Général**
Wahis 53 1030 Brussels, BELGIUM

CE IVD